Changes for the Better

MITSUBISHI ELECTRIC

SPLIT-TYPE, HEAT PUMP AIR CONDITIONERS

December 2012

No. OCH449
REVISED EDITION-A

TECHNICAL & SERVICE MANUAL

Series PCFY Ceiling Suspended R410A

Indoor unit [Model names]	[Service Ref.]
PCFY-P40VKM-E	PCFY-P40VKM-E PCFY-P40VKM-ER1
PCFY-P63VKM-E	PCFY-P63VKM-E PCFY-P63VKM-ER1
PCFY-P100VKM-E	PCFY-P100VKM-E PCFY-P100VKM-ER1
PCFY-P125VKM-E	PCFY-P125VKM-E PCFY-P125VKM-ER1

Revision:
- PCFY-P40/63/100/125VKM-ER1 have been added in REVISED EDITION-A.
- Some descriptions have been modified.

- Please void OCH449.

Note:
- This manual describes only service data of the indoor units.
- RoHS compliant products have <G> mark on the spec name plate.

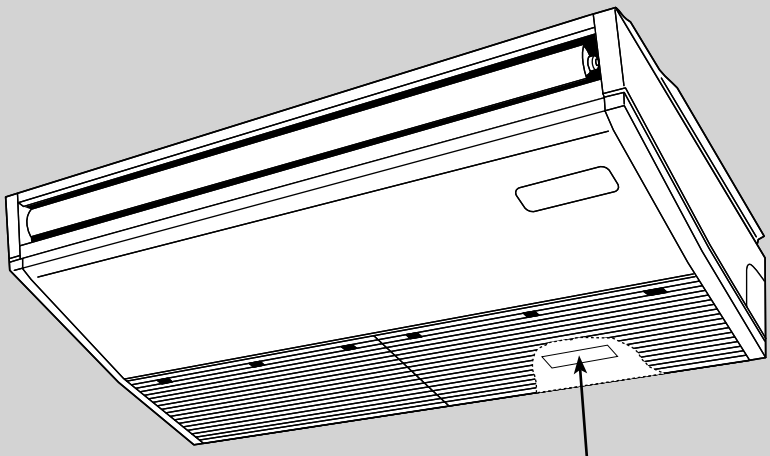

CONTENTS

1. TECHNICAL CHANGES ····· 2
2. SAFETY PRECAUTION ····· 2
3. PART NAMES AND FUNCTIONS ····· 4
4. SPECIFICATION ····· 11
5. OUTLINES AND DIMENSIONS ····· 15
6. WIRING DIAGRAM ····· 18
7. REFRIGERANT SYSTEM DIAGRAM ····· 20
8. TROUBLESHOOTING ····· 21
9. DISASSEMBLY PROCEDURE ····· 30

PARTS CATALOG (OCB449)

1 TECHNICAL CHANGES

PCFY-P40VKM-E ➔ PCFY-P40VKM-ER1
PCFY-P63VKM-E ➔ PCFY-P63VKM-ER1
PCFY-P100VKM-E ➔ PCFY-P100VKM-ER1
PCFY-P125VKM-E ➔ PCFY-P125VKM-ER1

• INDOOR CONTROLLER BOARD (I.B.) has been changed. (S/W version up)

2 SAFETY PRECAUTION

Cautions for units utilizing refrigerant R410A

Do not use the existing refrigerant piping.

The old refrigerant and lubricant in the existing piping contains a large amount of chlorine which may cause the lubricant deterioration of the new unit.

Use “low residual oil piping”

If there is a large amount of residual oil (hydraulic oil, etc.) inside the piping and joints, deterioration of the lubricant will result.

Store the piping indoors, and both ends of the piping sealed until just before brazing. (Leave elbow joints, etc. in their packaging.)

If dirt, dust or moisture enters into refrigerant cycle, that can cause deterioration of refrigerant oil or malfunction of compressor.

The refrigerant oil applied to flare and flange connections must be ester oil, ether oil or alkylbenzene oil in a small amount.

If large amount of mineral oil enters, that can cause deterioration of refrigerant oil etc.

Charge refrigerant from liquid phase of gas cylinder.

If the refrigerant is charged from gas phase, composition change may occur in refrigerant and the efficiency will be lowered.

Do not use refrigerant other than R410A.

If other refrigerant (R22 etc.) is used, chlorine in refrigerant can cause deterioration of refrigerant oil etc.

Use a vacuum pump with a reverse flow check valve.

Vacuum pump oil may flow back into refrigerant cycle and that can cause deterioration of refrigerant oil etc.

Use the following tools specifically designed for use with R410A refrigerant.

The following tools are necessary to use R410A refrigerant.

Tools for R410A	
Gauge manifold	Flare tool
Charge hose	Size adjustment gauge
Gas leak detector	Vacuum pump adaptor
Torque wrench	Electronic refrigerant charging scale

Handle tools with care.

If dirt, dust or moisture enters into refrigerant cycle, that can cause deterioration of refrigerant oil or malfunction of compressor.

Do not use a charging cylinder.

If a charging cylinder is used, the composition of refrigerant will change and the efficiency will be lowered.

Use the specified refrigerant only.

Never use any refrigerant other than that specified.
Doing so may cause a burst, an explosion, or fire when the unit is being used, serviced, or disposed of.
Correct refrigerant is specified in the manuals and on the spec labels provided with our products.
We will not be held responsible for mechanical failure, system malfunction, unit breakdown or accidents caused by failure to follow the instructions.

Ventilate the room if refrigerant leaks during operation. If refrigerant comes into contact with a flame, poisonous gases will be released.

[1] Cautions for service

(1) Perform service after recovering the refrigerant left in unit completely.
(2) Do not release refrigerant in the air.
(3) After completing service, charge the cycle with specified amount of refrigerant.
(4) When performing service, install a filter drier simultaneously.
Be sure to use a filter drier for new refrigerant.

[2] Additional refrigerant charge

When charging directly from cylinder

· Check that cylinder for R410A on the market is syphon type.
· Charging should be performed with the cylinder of syphon standing vertically. (Refrigerant is charged from liquid phase.)

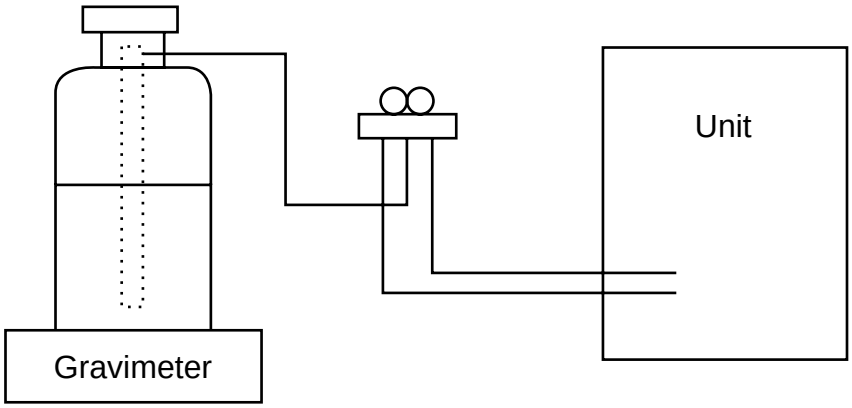

[3] Service tools

Use the below service tools as exclusive tools for R410A refrigerant.

No.	Tool name	Specifications
①	Gauge manifold	· Only for R410A
		· Use the existing fitting specifications. (UNF1/2)
		· Use high-tension side pressure of 5.3MPa·G or over.
②	Charge hose	· Only for R410A
		· Use pressure performance of 5.09MPa·G or over.
③	Electronic scale	——
④	Gas leak detector	· Use the detector for R134a, R407C or R410A.
⑤	Adaptor for reverse flow check	· Attach on vacuum pump.
⑥	Refrigerant charge base	——
⑦	Refrigerant cylinder	· Only for R410A · Top of cylinder (Pink) · Cylinder with syphon
⑧	Refrigerant recovery equipment	——

3 PART NAMES AND FUNCTIONS

3-1. INDOOR UNIT

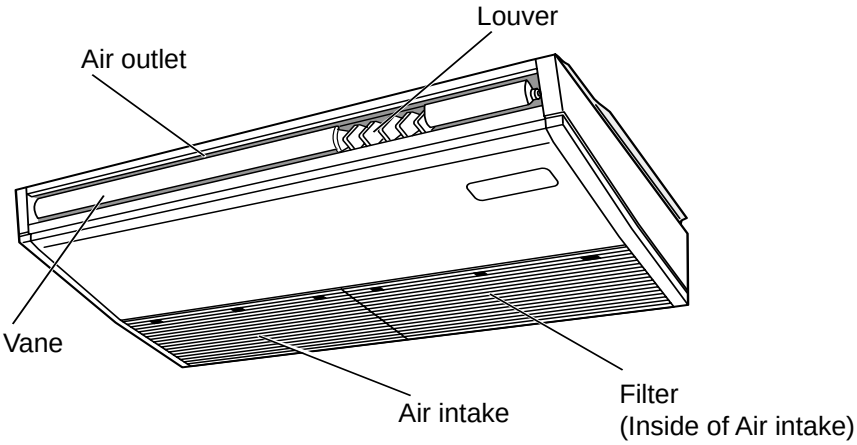

3-2. WIRED REMOTE CONTROLLER <PAR-30MAA/PAR-31MAA>

Wired remote controller function

* The functions which can be used are restricted according to the model.

○ : Supported ✕ : Unsupported

	Function	PAR-30MAA/PAR-31MAA		PAR-21MAA
		Slim	City multi	
Body	Product size H × W × D (mm)	120 × 120 × 19		120 × 130 × 19
	LCD	Full Dot LCD		Partial Dot LCD
	Backlight	○		✕
Energy-saving	Energy-saving operation schedule	○	✕	✕
	Automatic return to the preset temperature	○		✕
Restriction	Setting the temperature range restriction	○		○
Function	Operation lock function	○		○
	Weekly timer	○		✕
	On / Off timer	○		○
	High Power	○	✕	✕
	Manual vane angle	○		○

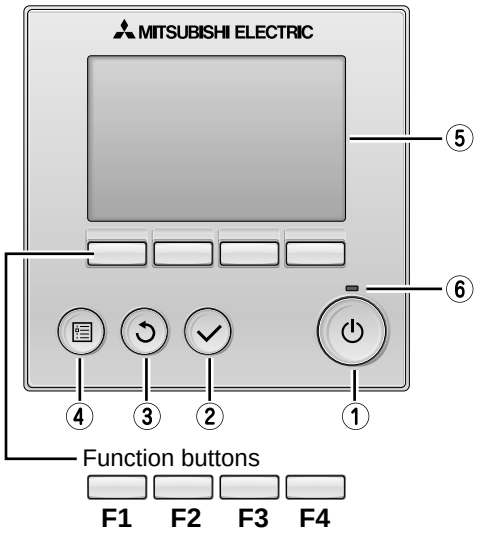

The functions of the function buttons change depending on the screen. Refer to the button function guide that appears at the bottom of the LCD for the functions they serve on a given screen.
When the system is centrally controlled, the button function guide that corresponds to the locked button will not appear.

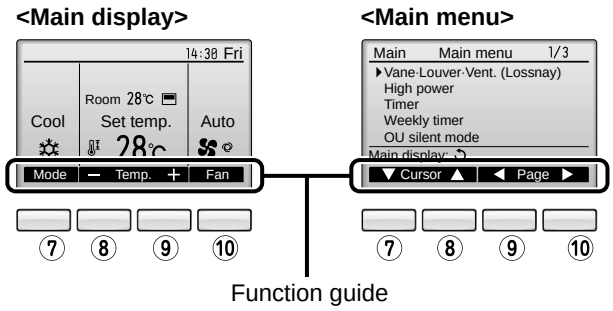

① ON / OFF button

Press to turn ON/OFF the indoor unit.

② SELECT button

Press to save the setting.

③ RETURN button

Press to return to the previous screen.

④ MENU button

Press to bring up the Main menu.

⑤ Backlit LCD

Operation settings will appear.
When the backlight is off, pressing any button turns the backlight on and it will stay lit for a certain period of time depending on the screen.

When the backlight is off, pressing any button turns the backlight on and does not perform its function. (except for the ⏻ (ON / OFF) button)

⑥ ON / OFF lamp

This lamp lights up in green while the unit is in operation. It blinks while the remote controller is starting up or when there is an error.

⑦ Function button F1

Main display : Press to change the operation mode.
Main menu : Press to move the cursor down.

⑧ Function button F2

Main display : Press to decrease temperature.
Main menu : Press to move the cursor up.

⑨ Function button F3

Main display : Press to increase temperature.
Main menu : Press to go to the previous page.

⑩ Function button F4

Main display : Press to change the fan speed.
Main menu : Press to go to the next page.

The main display can be displayed in two different modes: "Full" and "Basic".
The factory setting is "Full". To switch to the "Basic" mode, change the setting on the Main display setting.

<Full mode>

* All icons are displayed for explanation.

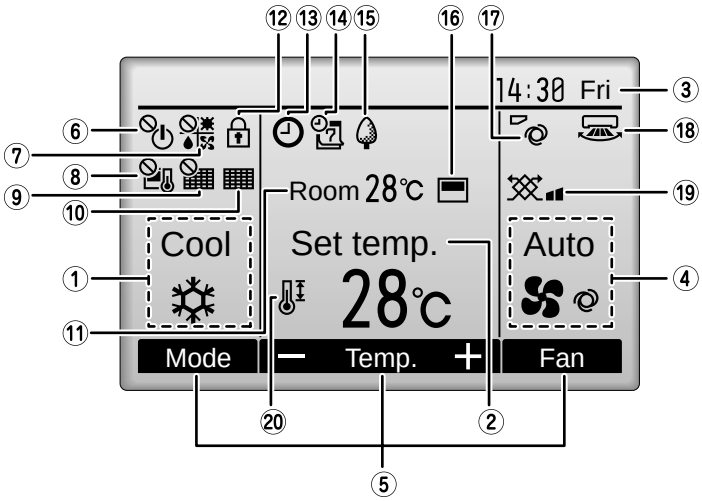

<Basic mode>

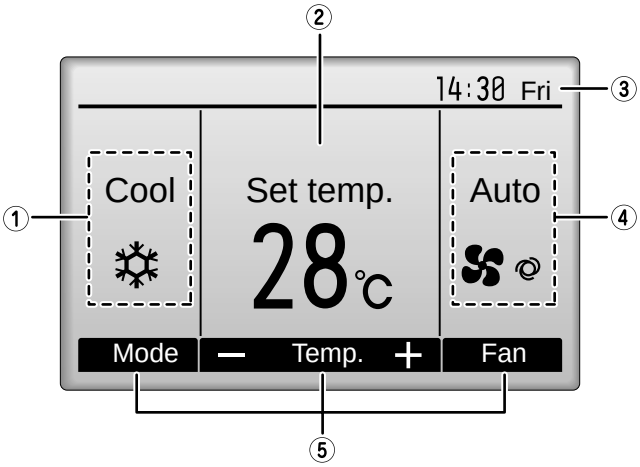

① Operation mode

Indoor unit operation mode appears here.

② Preset temperature

Preset temperature appears here.

③ Clock (See the Installation Manual.)

Current time appears here.

④ Fan speed

Fan speed setting appears here.

⑤ Button function guide

Functions of the corresponding buttons appear here.

⑥

Appears when the ON/OFF operation is centrally controlled.

⑦

Appears when the operation mode is centrally controlled.

⑧

Appears when the preset temperature is centrally controlled.

⑨

Appears when the filter reset function is centrally controlled.

⑩

Indicates when filter needs maintenance.

⑪ Room temperature (See the Installation Manual.)

Current room temperature appears here.

⑫

Appears when the buttons are locked.

⑬

Appears when the On/Off timer or Night setback function is enabled.

⑭

Appears when the Weekly timer is enabled.

⑮

Appears while the units are operated in the energy-save mode.

⑯

Appears when the built-in thermistor on the remote controller is activated to monitor the room temperature.
appears when the thermistor on the indoor unit is activated to monitor the room temperature.

⑰

Indicates the vane setting.

⑱

Indicates the louver setting.

⑲

Indicates the ventilation setting.

⑳

Appears when the preset temperature range is restricted.

Most settings (except ON / OFF, mode, fan speed, temperature) can be made from the Menu screen.

Menu structure

Not all functions are available on all models of indoor units.

Main menu list

Setting and display items		Setting details
Vane · Louver · Vent. (Lossnay)		**Use to set the vane angle.** • Select a desired vane setting from five different settings. **Use to turn ON / OFF the louver.** • Select a desired setting from "ON" and "OFF." **Use to set the amount of ventilation.** • Select a desired setting from "Off," "Low," and "High."
High power		**Use to reach the comfortable room temperature quickly.** • Units can be operated in the High-power mode for up to 30 minutes.
Timer	**On/Off timer**	**Use to set the operation On/Off times.** • Time can be set in 5-minute increments. * Clock setting is required.
	Auto-Off timer	**Use to set the Auto-Off time.** • Time can be set to a value from 30 to 240 in 10-minute increments.
Filter information		**Use to check the filter status.** • The filter sign can be reset.
Error information		**Use to check error information when an error occurs.** • Error code, error source, refrigerant address, unit model, manufacturing number, contact information (dealer's phone number) can be displayed. * The unit model, manufacturing number, and contact information need to be registered in advance to be displayed.
Weekly timer		**Use to set the weekly operation On / Off times.** • Up to eight operation patterns can be set for each day. * Clock setting is required. * Not valid when the On/Off timer is enabled.
Energy saving	**Auto return**	**Use to get the units to operate at the preset temperature after performing energy-save operation for a specified time period.** • Time can be set to a value from 30 and 120 in 10-minute increments. * This function will not be valid when the preset temperature ranges are restricted.
	Schedule	**Set the start/stop times to operate the units in the energy-save mode for each day of the week, and set the energy-saving rate.** • Up to four energy-save operation patterns can be set for each day. • Time can be set in 5-minute increments. • Energy-saving rate can be set to a value from 0% or 50 to 90% in 10% increments. * Clock setting is required.
Night setback		**Use to make Night setback settings.** • Select "Yes" to enable the setting, and "No" to disable the setting. The temperature range and the start/stop times can be set. * Clock setting is required.
Restriction	**Temp. range**	**Use to restrict the preset temperature range.** • Different temperature ranges can be set for different operation modes.
	Operation lock	**Use to lock selected functions.** • The locked functions cannot be operated.
Maintenance	**Auto descending panel**	**Auto descending panel (Optional parts) Up / Down you can do.**
	Manual vane angle	**Use to set the vane angle for each vane to a fixed position.**
Initial setting	**Main/Sub**	**When connecting two remote controllers, one of them needs to be designated as a sub controller.**
	Clock	**Use to set the current time.**
	Main display	**Use to switch between "Full" and "Basic" modes for the Main display.** • The default setting is "Full."
	Contrast	**Use to adjust screen contrast.**

Setting and display items		Setting details
Initial setting	**Display details**	**Make the settings for the remote controller related items as necessary.** **Clock:** The factory settings are "Yes" and "24h" format. **Temperature:** Set either Celsius (°C) or Fahrenheit (°F). **Room temp. :** Set Show or Hide. **Auto mode:** Set the Auto mode display or Only Auto display.
	Auto mode	**Whether or not to use the AUTO mode can be selected by using the button.** **This setting is valid only when indoor units with the AUTO mode function are connected.**
	Administrator password	**The administrator password is required to make the settings for the following items.** • Timer setting • Energy-save setting • Weekly timer setting • Restriction setting • Outdoor unit silent mode setting • Night set back
	Language selection	**Use to select the desired language.**
Service	**Test run**	**Select "Test run" from the Service menu to bring up the Test run menu.** • Test run • Drain pump test run
	Input maintenance	**Select "Input maintenance Info." from the Service menu to bring up the Maintenance information screen.** **The following settings can be made from the Maintenance Information screen.** • Model name input • Serial No. input • Dealer information input
	Function setting	**Make the settings for the indoor unit functions via the remote controller as necessary.**
	LOSSNAY setting (City Multi only)	**This setting is required only when the operation of City Multi units is interlocked with LOSSNAY units.**
	Check	**Error history:** Display the error history and execute delete error history. **Refrigerant leak check:** Refrigerant leaks can be judged. **Smooth maintenance:** The indoor and outdoor maintenance data can be displayed. **Request cord:** Details of the operation data including each thermistor temperature and error history can be checked.
	Self check	**Error history of each unit can be checked via the remote controller.**
	Maintenance password	**Take the following steps to change the maintenance password.**
	Remote controller check	**When the remote controller does not work properly, use the remote controller checking function to troublushoot the problem.**

3-3. WIRED REMOTE CONTROLLER <PAR-21MAA>

Display Section

For purposes of this explanation, all parts of the display are shown. During actual operation, only the relevant items will be lit.

Day-of-Week
Shows the current day of the week.

Time/Timer Display
Shows the current time, unless the simple or Auto Off timer is set.
If the simple or Auto Off timer is set, the time to be switched off is shown.

"Sensor" indication
Displayed when the remote controller sensor is used.

"Locked" indicator
Indicates that remote controller buttons have been locked.

Identifies the current operation
Shows the operating mode, etc.
*Multilanguage display is available.

"Clean The Filter" indicator
To be displayed on when it is time to clean the filter.

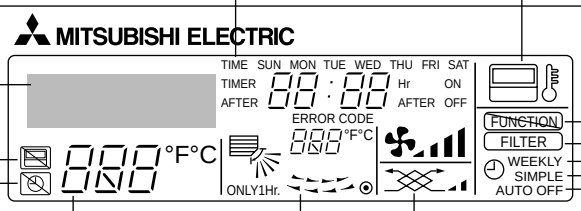

Timer indicators
The indicator comes on if the corresponding timer is set.

"Centrally Controlled" indicator
Indicates that operation from the remote controller has been prohibited by a master controller.

Fan Speed indicator
Shows the selected fan speed.

Ventilation indicator
Appears when the unit is running in Ventilation mode.

"Timer is Off" indicator
Indicates that the timer is off.

Up/Down Air Direction indicator
The indicator ↘ shows the direction of the outcoming airflow.

Room Temperature display
Shows the room temperature. The room temperature display range is 8 - 39°C. The display blinks if the temperature is less than 8°C or 39°C or more.

"One Hour Only" indicator
Displayed if the airflow is set to Low or downward during COOL or DRY mode. (Operation varies according to model.)
The indicator goes off in one hour, at which time the airflow direction also changes.

Louver display
Indicates the action of the swing louver. Does not appear if the louver is not running.

Temperature Setting
Shows the target temperature.

◉ (Power On indicator)
Indicates that the power is on.

Operation Section

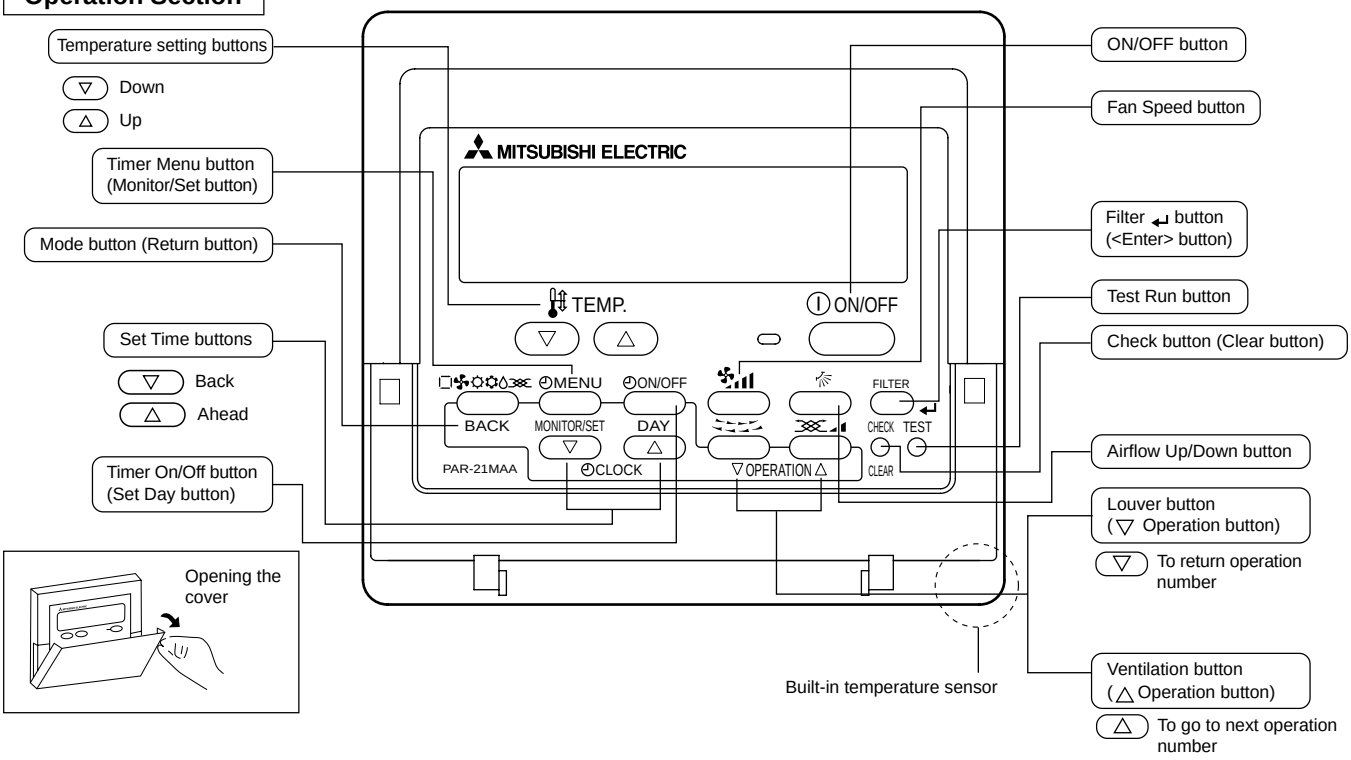

Note:

- "PLEASE WAIT" message
  This message is displayed for approximately 3 minutes when power is supplied to the indoor unit or when the unit is recovering from a power failure.
- "NOT AVAILABLE" message
  This message is displayed if an invalid button is pressed (to operate a function that the indoor unit does not have).
  If a single remote controller is used to operate multiple indoor units simultaneously that are different types, this message will not be displayed as far as any of the indoor units is equipped with the function.

4 SPECIFICATION

4-1. SPECIFICATIONS

Model			PCFY-P40VKM-E	PCFY-P63VKM-E	PCFY-P100VKM-E	PCFY-P125VKM-E
Power source			1-phase 220-240V 50Hz, 1-phase 220V 60Hz			
Cooling capacity (Nominal)	*1	kW	4.5	7.1	11.2	14.0
	*1	kcal/h	3,900	6,100	9,600	12,000
	*1	Btu/h	15,400	24,200	38,200	47,800
	*2	kcal/h	4,000	6,300	10,000	12,500
	Power input	kW	0.040	0.050	0.090	0.110
	Current input	A	0.28	0.33	0.65	0.76
Heating capacity (Nominal)	*3	kW	5.0	8.0	12.5	16.0
	*3	kcal/h	4,300	6,900	10,800	13,800
	*3	Btu/h	17,100	27,300	42,700	54,600
	Power input	kW	0.040	0.050	0.090	0.110
	Current input	A	0.28	0.33	0.65	0.76
External finish			MUNSELL (6.4Y 8.9/0.4)			
External dimensions H x W x D		mm	230×960×680	230×1280×680	230×1600×680	
		in.	9-1/16×37-13/16×26-3/4	9-1/16×50-3/8×26-3/4	9-1/16×63×26-3/4	
Net weight		kg (lb)	24 (53)	32 (71)	36 (79)	38 (84)
Heat exchanger			Cross fin (Aluminum fin and copper tube)			
FAN	Type x quantity		Sirocco fan × 2	Sirocco fan × 3	Sirocco fan × 4	
	External static press.	Pa	0			
		mmH_2O	0			
	Motor type		DC motor			
	Motor output	kW	0.090	0.095	0.160	
	Driving mechanism		Direct-driven by motor			
	Airflow rate (Low-Mid2-Mid1-High)	m^3/min	10-11-12-13	14-15-16-18	21-24-26-28	21-24-27-31
		L/s	167-183-200-217	233-250-267-300	350-400-433-467	350-400-450-517
		cfm	353-388-424-459	494-530-565-636	742-847-918-989	742-847-953-1095
Noise level (Low-Mid2-Mid1-High) (measured in anechoic room)		dB <A>	29-32-34-36	31-33-35-37	36-38-41-43	36-39-42-44
Insulation material			Polyeter sheet			
Air filter			PP honeycomb			
Protection device			Fuse			
Refrigerant control device			LEV			
Connectable outdoor unit			R410A CITY MULTI			
Diameter of refrigerant pipe	Liquid	mm(in.)	ø6.35 (ø1/4) Flare	ø9.52 (ø3/8) Flare	ø9.52 (ø3/8) Flare	ø9.52 (ø3/8) Flare
	Gas	mm(in.)	ø12.7 (ø1/2) Flare	ø15.88 (ø5/8) Flare	ø19.05 (ø3/4) Flare	ø19.05 (ø3/4) Flare
Field drain pipe size		mm(in.)	O.D. 26mm (1)			
Standard attachment	Document Accessory		Installation Manual, Instruction Book			
Optional parts	Drain pump kit		PAC-SH83DM-E	PAC-SH84DM-E		
	High efficiency filter		PAC-SH88KF-E	PAC-SH89KF-E	PAC-SH90KF-E	
	Wireless remote controller kit		PAR-SL94B-E			
Remarks	Installation		Details on foundation work, insulation work, electrical wiring, power source switch, and other items shall be referred to the Installation Manual.			

Note :

	*1 Nominal cooling conditions	*2 Nominal cooling conditions	*3 Nominal heating conditions
Indoor :	27°CDB/19°CWB (81°FDB/66°FWB)	27°CDB/19.5°CWB (81°FDB/67°FWB)	20°CDB (68°FDB)
Outdoor :	35°CDB (95°FDB)	35°CDB (95°FDB)	7°CDB/6°CWB (45°FDB/43°FWB)
Pipe length :	7.5 m (24-9/16 ft)	5 m (16-3/8 ft)	7.5 m (24-9/16 ft)
Level difference :	0 m (0 ft)	0 m (0 ft)	0 m (0 ft)

* Nominal conditions *1, *3 are subject to JIS B8615-1.
* Due to continuing improvement, above specification may be subject to change without notice.

Unit converter

kcal/h = kW × 860
Btu/h = kW × 3,412
cfm = m^3/min × 35.31
lb = kg/0.4536

*Above specification data is subject to rounding variation.

4-2. ELECTRICAL PARTS SPECIFICATIONS

Service Ref. / Parts name	Symbol	PCFY-P40VKM-E PCFY-P40VKM-ER1	PCFY-P63VKM-E PCFY-P63VKM-ER1	PCFY-P100VKM-E PCFY-P125VKM-E PCFY-P100VKM-ER1 PCFY-P125VKM-ER1
Room temperature thermistor	TH21	Resistance 0°C/15kΩ, 10°C/9.6kΩ, 20°C/6.3kΩ, 25°C/5.4kΩ, 30°C/4.3kΩ, 40°C/3.0kΩ		
Liquid pipe thermistor	TH22	Resistance 0°C/15kΩ, 10°C/9.6kΩ, 20°C/6.3kΩ, 25°C/5.4kΩ, 30°C/4.3kΩ, 40°C/3.0kΩ		
Gas pipe thermistor	TH23	Resistance 0°C/15kΩ, 10°C/9.6kΩ, 20°C/6.3kΩ, 25°C/5.4kΩ, 30°C/4.3kΩ, 40°C/3.0kΩ		
Fuse (Indoor controller board)	FUSE	250V 6.3A		
Fan motor	MF	8-pole OUTPUT 90W	8-pole OUTPUT 95W	8-pole OUTPUT 160W
Vane motor	MV	MSBPC20 DC12V 300Ω/phase		
Drain-pump (Option)	DP	INPUT 12/10.8W 24ℓ/Hr		
Drain float switch	FS	Open / Short detection DC 5V		
Linear expansion valve	LEV	DC12V Stepping motor drive Port dimension ø3.2 (0~2000pulse) EFM-40YGME		DC12V Stepping motor drive Port dimension ø5.2 (0~2000pulse) EFM-80YGME
Power supply terminal block	TB2	(L, N, ⏚) Rated to 330V 30A *		
Transmission terminal block	TB5	(M1, M2, S) Rated to 250V 20A *		
MA remote controller terminal block	TB15	(1, 2) Rated to 250V 10A *		

* Refer to WIRING DIAGRAM for the supplied voltage.

4-3. SOUND LEVEL

PCFY-P·VKM-E

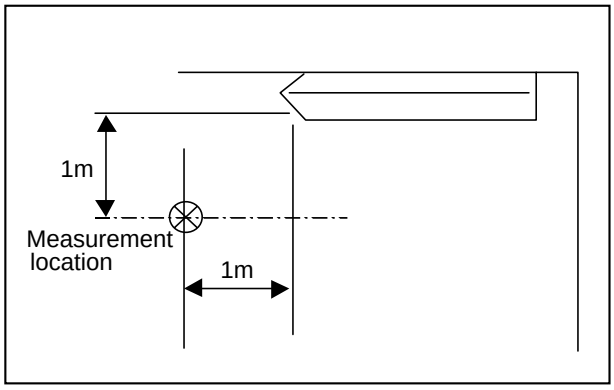

Sound level at anechoic room : Low-Mid2-Mid1-High

Service Ref.	Sound level dB (A)
PCFY-P40VKM-E PCFY-P40VKM-ER1	29-32-34-36
PCFY-P63VKM-E PCFY-P63VKM-ER1	31-33-35-37
PCFY-P100VKM-E PCFY-P100VKM-ER1	36-38-41-43
PCFY-P125VKM-E PCFY-P125VKM-ER1	36-39-42-44

* Measured in anechoic room.

4-4. NC CURVES

PCFY-P40VKM-E
PCFY-P40VKM-ER1

External static pressure : 0Pa
Power source : 220,230,240V, 50Hz / 220V, 60Hz

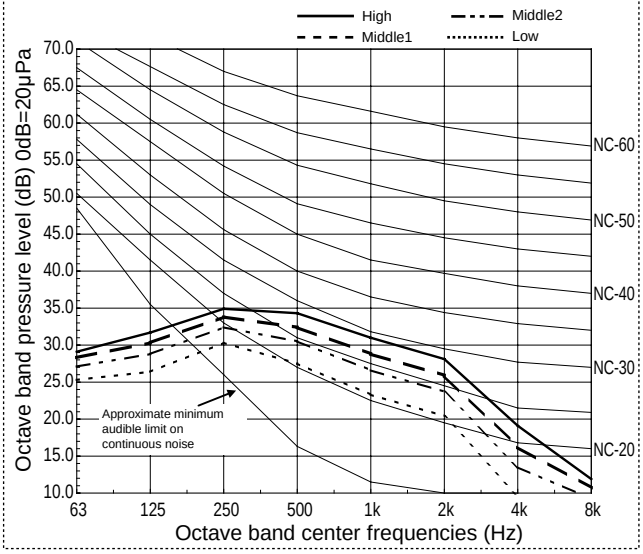

PCFY-P63VKM-E
PCFY-P63VKM-ER1

External static pressure : 0Pa
Power source : 220,230,240V, 50Hz / 220V, 60Hz

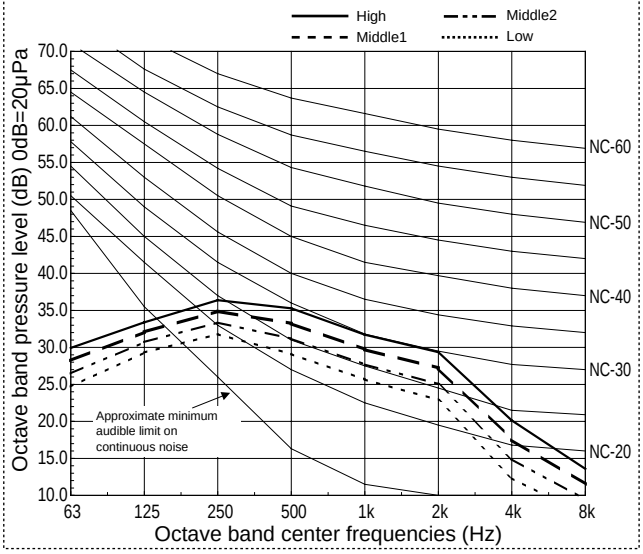

PCFY-P100VKM-E
PCFY-P100VKM-ER1

External static pressure : 0Pa
Power source : 220,230,240V, 50Hz / 220V, 60Hz

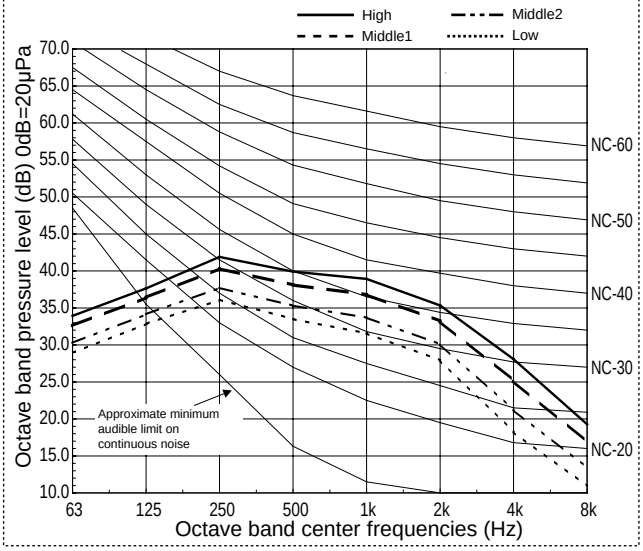

PCFY-P125VKM-E
PCFY-P125VKM-ER1

External static pressure : 0Pa
Power source : 220,230,240V, 50Hz / 220V, 60Hz

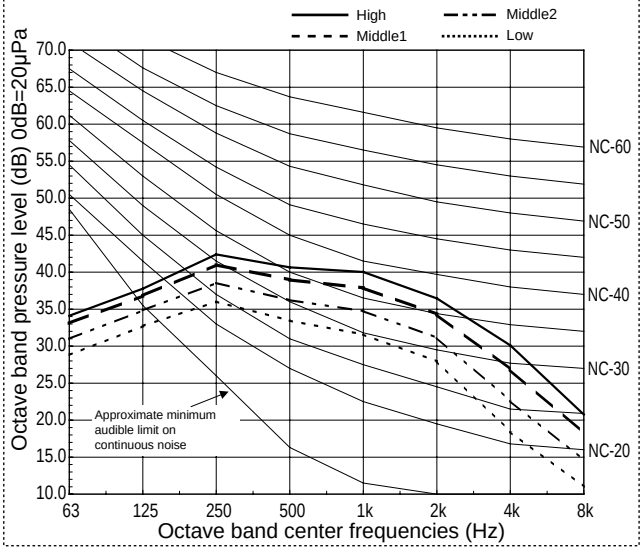

4-5. FRESH AIR INTAKE AMOUNT & STATIC PRESSURE CHARACTERISTICS

PCFY-P40VKM-E
PCFY-P40VKM-ER1

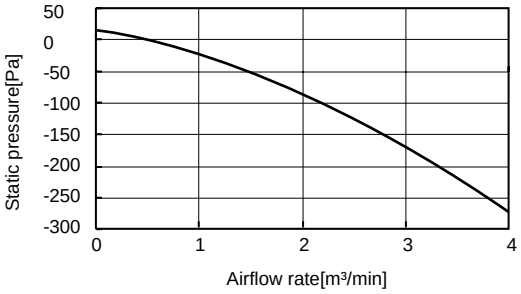

PCFY-P63VKM-E
PCFY-P63VKM-ER1

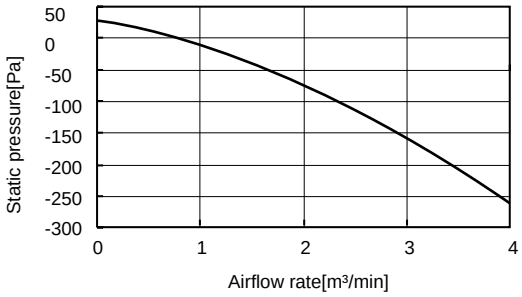

PCFY-P100, 125VKM-E
PCFY-P100, 125VKM-ER1

How to read curves

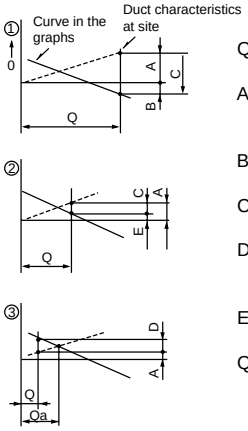

Q…Designed amount of fresh air intake <m³/min>
A…Static pressure loss of fresh air intake duct system with airflow amount Q <Pa>
B…Forced static pressure at air conditioner inlet with airflow amount Q <Pa>
C…Static pressure of booster fan with airflow amount Q <Pa>
D…Static pressure loss increase amount of fresh air intake duct system for airflow amount Q <Pa>
E…Static pressure of indoor unit with airflow amount Q <Pa>
Qa…Estimated amount of fresh air intake without D <m³/min>

PCFY-P40VKM-E
PCFY-P40VKM-ER1

Unit : mm

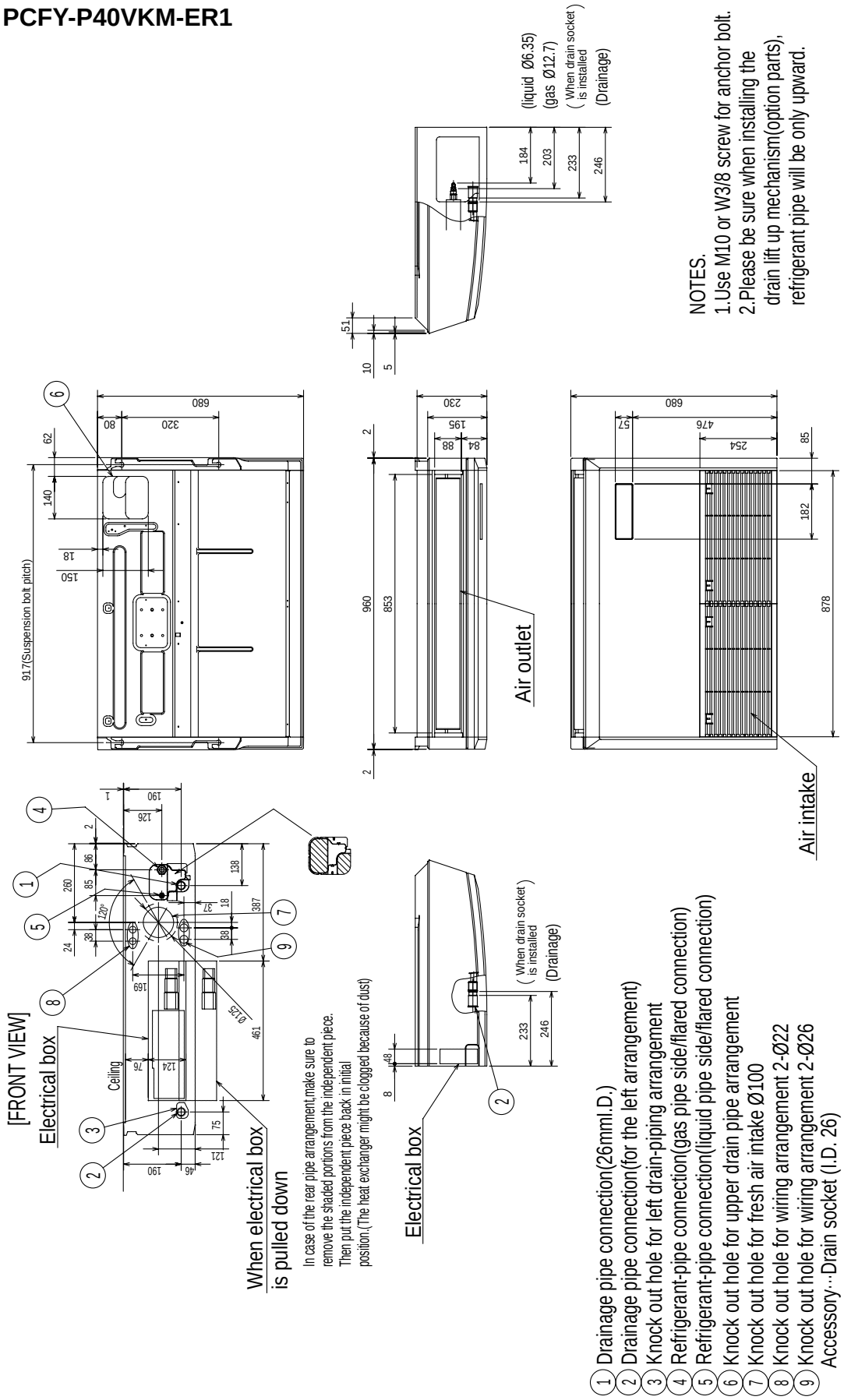

NOTES.
1.Use M10 or W3/8 screw for anchor bolt.
2.Please be sure when installing the drain lift up mechanism(option parts), refrigerant pipe will be only upward.

PCFY-P63VKM-E
PCFY-P63VKM-ER1

Unit : mm

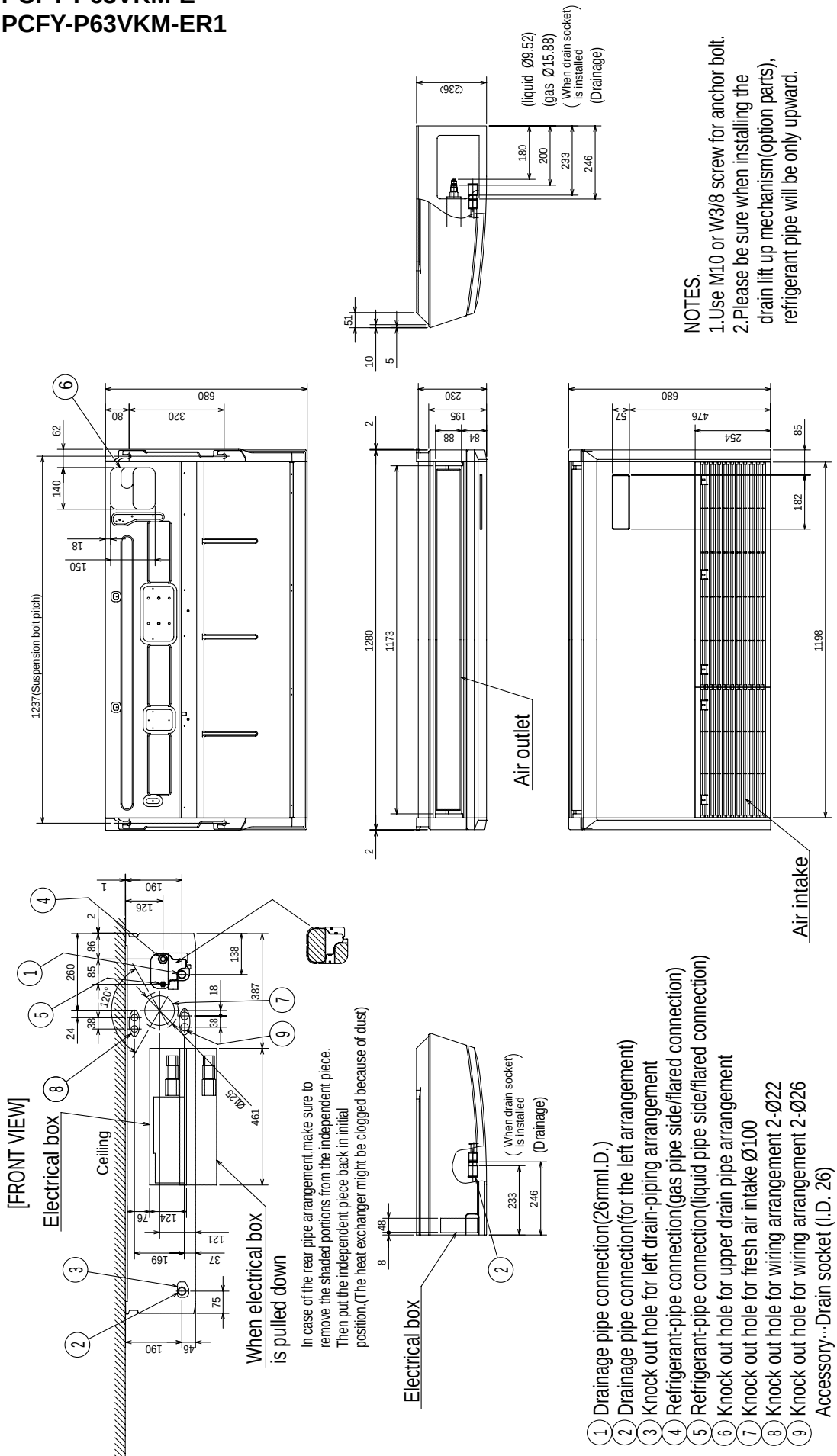

OCH449A

PCFY-P100VKM-E
PCFY-P125VKM-E
PCFY-P100VKM-ER1
PCFY-P125VKM-ER1

Unit : mm

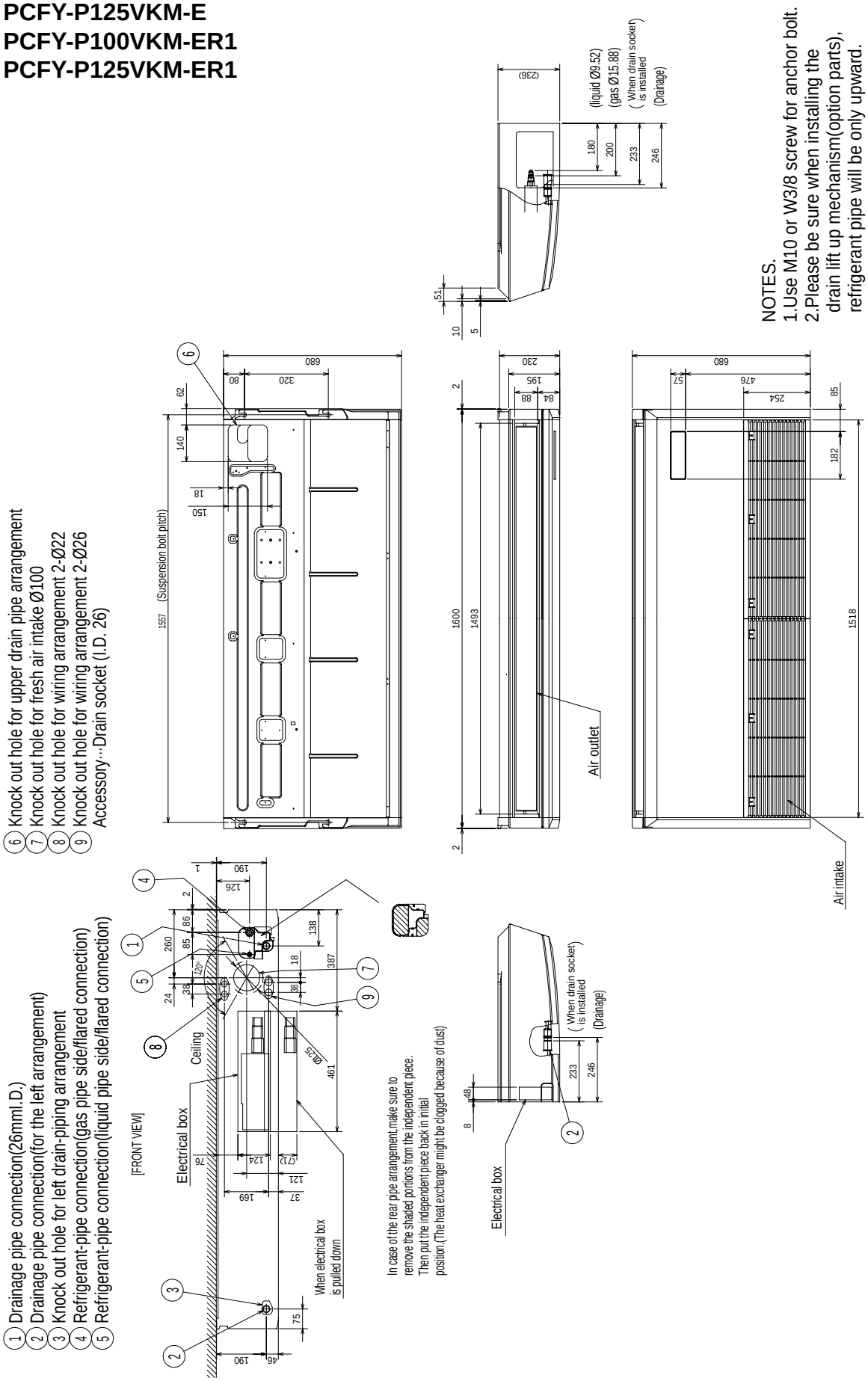

6 WIRING DIAGRAM

PCFY-P40VKM-E PCFY-P63VKM-E PCFY-P100VKM-E PCFY-P125VKM-E

SYMBOL		NAME	
I. B		INDOOR CONTROLLER BOARD	
	CN27	CONNECTOR	DAMPER
	CN32		REMOTE SWITCH
	CN51		CENTRALLY CONTROL
	CN52		REMOTE INDICATION
	DSA	SURGE ABSORBER	
	FUSE	FUSE (T6.3AL250V)	
	SW2	SWITCH	CAPACITY CODE
	SW3		MODE SELECTION
	SW4		MODEL SELECTION
	SWE		DRAIN PUMP (TEST MODE)
	X1	AUX. RELAY	DRAIN PUMP (OPTIONAL PARTS)
	ZNR01,02	VARISTOR	
LEV		LINEAR EXPANSION VALVE	
DCL		REACTOR	
MF		FAN MOTOR	
MV		VANE MOTOR	
TB2		TERMINAL BLOCK	POWER SUPPLY
TB5			TRANSMISSION
TB15			MA-REMOTE CONTROLLER
TH21		THERMISTOR	ROOM TEMP. DETECTION (0°C / 15kΩ, 25°C / 5.4kΩ)

SYMBOL		NAME	
TH22		THERMISTOR	PIPE TEMP. DETECTION / LIQUID (0°C / 15kΩ, 25°C / 5.4kΩ)
TH23			PIPE TEMP. DETECTION / GAS (0°C / 15kΩ, 25°C / 5.4kΩ)
A. B		ADDRESS BOARD	
	SWA	SWITCH	CEILING HEIGHT SELECTOR
	SWC		OPTION SELECTOR
	SW1		MODE SELECTION
	SW11		ADDRESS SETTING 1s DIGIT
	SW12		ADDRESS SETTING 10ths DIGIT
	SW14		BRANCH No.
OPTIONAL PARTS			
W.B		PCB FOR WIRELESS REMOTE CONTROLLER	
	BZ	BUZZER	
	LED1	LED (OPERATION INDICATION : GREEN)	
	LED2	LED (PREPARATION FOR HEATING : ORANGE)	
	RU	RECEVING UNIT	
	SW1	EMERGENCY OPERATION (HEAT / DOWN)	
	SW2	EMERGENCY OPERATION (COOL / UP)	
DP		DRAIN PUMP	
	FS	DRAIN FLOAT SWITCH	

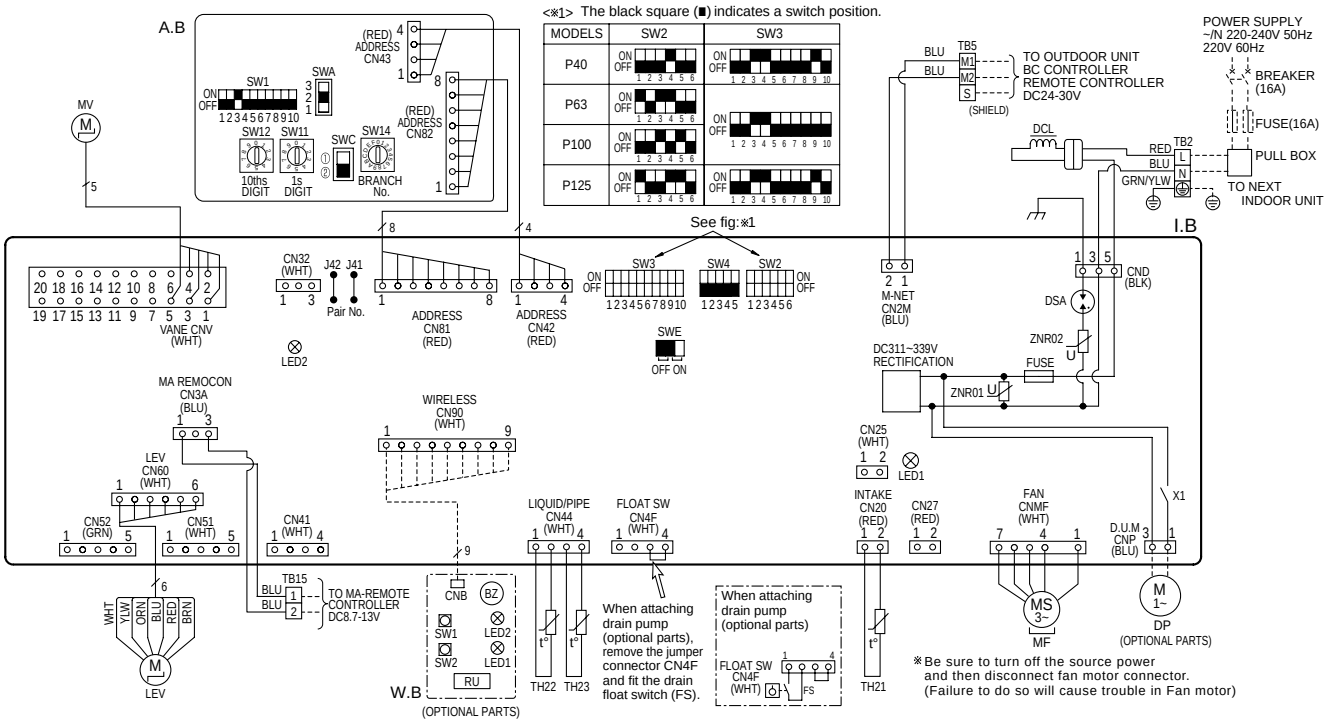

LED on indoor board for service

Mark	Meaning	Function
LED1	Main power supply	Main power supply (Indoor unit:220-240V) Power on → lamp is lit
LED2	Power supply for MA-Remote controller	Power supply for MA-Remote controller on → lamp is lit

NOTES:
1.At servicing for outdoor unit,always follow the wiring diagram of outdoor unit.
2.In case of using MA-Remote controller, please connect to TB15.
(Remote controller wire is non-polar.)
3.In case of using M-NET, please connect to TB5. (Transmission line is non-polar.)
4.Symbol [S] of TB5 is the shield wire connection.
5.Symbols used in wiring diagram above are, ▭▭▭: terminal block, ▭○○○:connecter.
6.The setting of the SW2 dip switches differs in the capacity. for the detail, refer to the fig:※1.

PCFY-P40VKM-ER1 PCFY-P63VKM-ER1 PCFY-P100VKM-ER1 PCFY-P125VKM-ER1

[LEGEND]

SYMBOL		NAME		SYMBOL		NAME	
I. B		INDOOR CONTROLLER BOARD		TH22		THERMISTOR	PIPE TEMP. DETECTION / LIQUID (0°C / 15kΩ, 25°C / 5.4kΩ)
	CN27	CONNECTOR	DAMPER	TH23			PIPE TEMP. DETECTION / GAS (0°C / 15kΩ, 25°C / 5.4kΩ)
	CN32		REMOTE SWITCH				
	CN51		CENTRALLY CONTROL				
	CN52		REMOTE INDICATION	A. B		ADDRESS BOARD	
	CN105		IT TERMINAL		SWA	SWITCH	CEILING HEIGHT SELECTOR
	FUSE	FUSE (T6.3AL250V)			SWC		OPTION SELECTOR
	SW2	SWITCH	CAPACITY CODE		SW1		MODE SELECTION
	SW3		MODE SELECTION		SW11		ADDRESS SETTING 1s DIGIT
	SW4		MODEL SELECTION		SW12		ADDRESS SETTING 10ths DIGIT
	SWE		DRAIN PUMP (TEST MODE)		SW14		BRANCH No.
	X1	AUX. RELAY	DRAIN PUMP (OPTIONAL PARTS)	OPTIONAL PARTS			
LEV		LINEAR EXPANSION VALVE			W.B		PCB FOR WIRELESS REMOTE CONTROLLER
DCL		REACTOR			BZ		BUZZER
MF		FAN MOTOR			LED1		LED (OPERATION INDICATION : GREEN)
MV		VANE MOTOR			LED2		LED (PREPARATION FOR HEATING : ORANGE)
TB2		TERMINAL BLOCK	POWER SUPPLY		RU		RECEVING UNIT
TB5			TRANSMISSION		SW1		EMERGENCY OPERATION (HEAT / DOWN)
TB15			MA-REMOTE CONTROLLER		SW2		EMERGENCY OPERATION (COOL / UP)
TH21		THERMISTOR	ROOM TEMP. DETECTION (0°C / 15kΩ, 25°C / 5.4kΩ)		DP		DRAIN PUMP
					FS		DRAIN FLOAT SWITCH

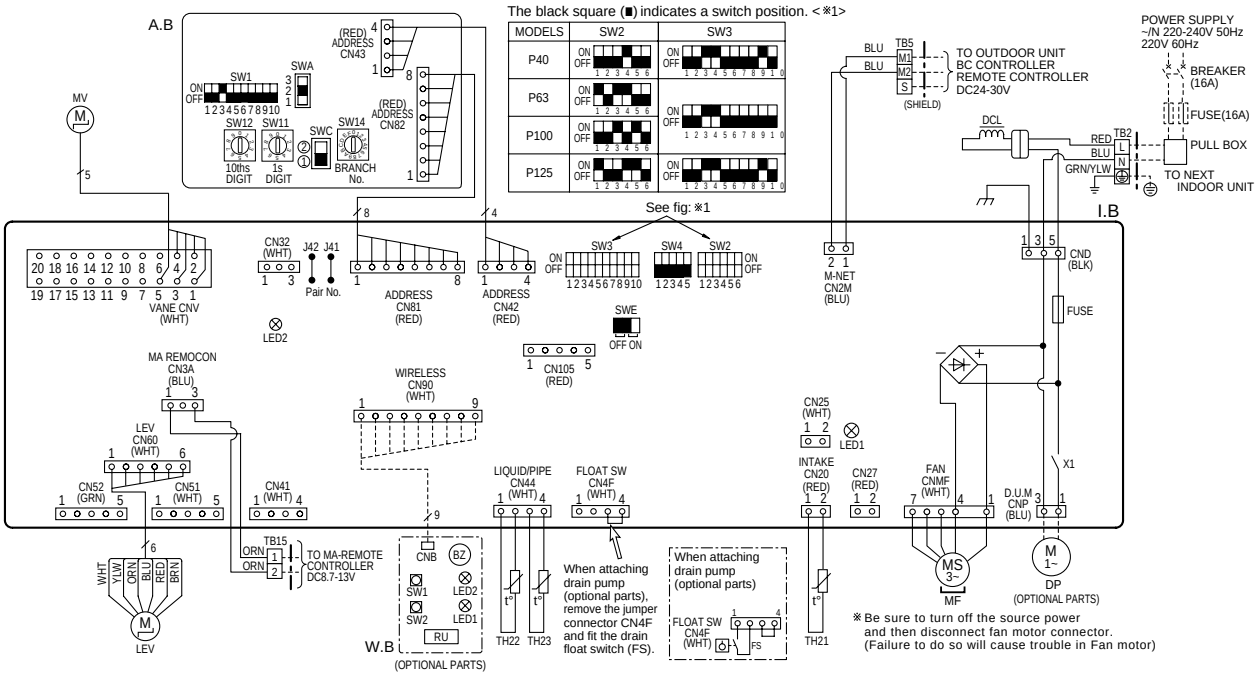

NOTES:
1. At servicing for outdoor unit, always follow the wiring diagram of outdoor unit.
2. In case of using MA-Remote controller, please connect to TB15.
   (Remote controller wire is non-polar.)
3. In case of using M-NET, please connect to TB5. (Transmission line is non-polar.)
4. Symbol [S] of TB5 is the shield wire connection.
5. Symbols used in wiring diagram above are, ☐☐☐ : terminal block, ○ ○ ○ : connecter.
6. The setting of the SW2 dip switches differs in the capacity. For the detail, refer to fig <※1>.

LED on indoor board for service

Mark	Meaning	Function
LED1	Main power supply	Main Power supply (Indoor unit:220-240V) power on → lamp is lit
LED2	Power supply for MA-Remote controller	Power supply for MA-Remote controller on → lamp is lit

7 REFRIGERANT SYSTEM DIAGRAM

PCFY-P40VKM-E **PCFY-P63VKM-E** **PCFY-P100VKM-E** **PCFY-P125VKM-E**
PCFY-P40VKM-ER1 **PCFY-P63VKM-ER1** **PCFY-P100VKM-ER1** **PCFY-P125VKM-ER1**

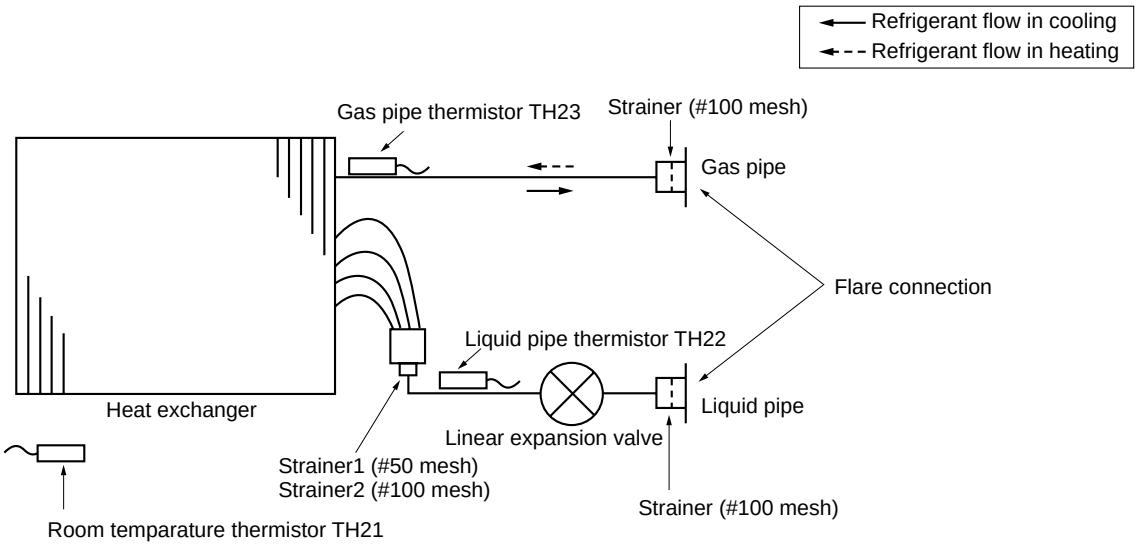

Unit : mm (inch)

Service Ref. / Item	PCFY-P40VKM-E PCFY-P40VKM-ER1	PCFY-P63VKM-E, PCFY-P63VKM-ER1 PCFY-P100VKM-E, PCFY-P100VKM-ER1 PCFY-P125VKM-E, PCFY-P125VKM-ER1
Gas pipe	ø12.7 (1/2)	ø15.88 (5/8)
Liquid pipe	ø6.35 (1/4)	ø9.52 (3/8)

8 TROUBLESHOOTING

8-1. HOW TO CHECK THE PARTS

PCFY-P40VKM-E PCFY-P63VKM-E PCFY-P100VKM-E PCFY-P125VKM-E
PCFY-P40VKM-ER1 PCFY-P63VKM-ER1 PCFY-P100VKM-ER1 PCFY-P125VKM-ER1

<table>
<tr><th>Parts name</th><th>Check points</th></tr>
<tr><td>Room temperature thermistor (TH21)
Liquid pipe thermistor (TH22)
Gas pipe thermistor (TH23)</td><td>Disconnect the connector then measure the resistance with a tester.
(At the ambient temperature of 10°C~30°C)
<table><tr><th>Normal</th><th>Abnormal</th></tr><tr><td>4.3kΩ~9.6kΩ</td><td>Open or short</td></tr></table>(Refer to Thermistor characteristic graph.)</td></tr>
<tr><td>Vane motor (MV)
 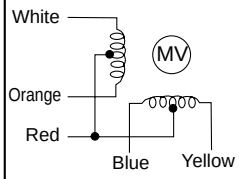
</td><td>Measure the resistance between the terminals with a tester.
(At the ambient temperature of 20°C~30°C
<table><tr><th>Connector</th><th>Normal</th><th>Abnormal</th></tr><tr><td>Red - Yellow</td><td rowspan="4">300Ω</td><td rowspan="4">Open or short</td></tr><tr><td>Red - Blue</td></tr><tr><td>Red - Orange</td></tr><tr><td>Red - White</td></tr></table></td></tr>
<tr><td>Drain pump (DP)
(Option)
 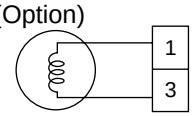
</td><td>Measure the resistance between the terminals with a tester.
(Winding temperature 20°C)
<table><tr><th>Normal</th><th>Abnormal</th></tr><tr><td>290Ω</td><td>Open or short</td></tr></table></td></tr>
<tr><td>Drain float switch (FS)
 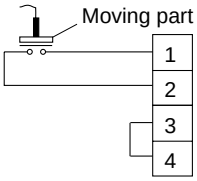

(Option)</td><td>Measure the resistance between the terminals with a tester.
<table><tr><th>State of moving part</th><th>Normal</th><th>Abnormal</th></tr><tr><td>UP</td><td>Short</td><td>Other than short</td></tr><tr><td>DOWN</td><td>Open</td><td>Other than open</td></tr></table> 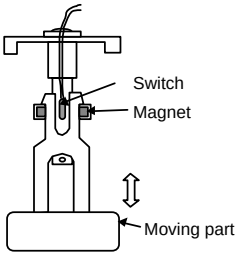
</td></tr>
<tr><td>Linear expansion valve (LEV)
 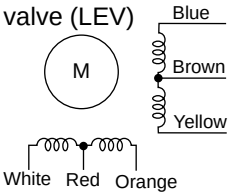
</td><td>Disconnect the connector then measure the resistance value with a tester.
<table><tr><th colspan="4">Normal</th><th>Abnormal</th></tr><tr><td>White-Red</td><td>Yellow-Brown</td><td>Orange-Red</td><td>Blue-Brown</td><td rowspan="2">Open or short</td></tr><tr><td colspan="4">200Ω ±10%</td></tr></table>Refer to 8-1-2.</td></tr>
</table>

8-1-1. Thermistor

<Thermistor characteristic graph>

Thermistor for lower temperature

Room temperature thermistor (TH21)
Liquid pipe temperature thermistor (TH22)
Gas pipe temperature thermistor (TH23)

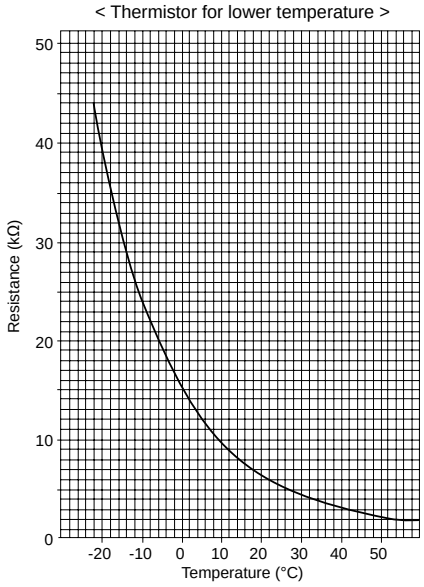

Thermistor R_0=15kΩ ± 3%
Fixed number of B=3480 ± 2%

$$Rt=15\exp\left\{3480\left(\frac{1}{273+t}-\frac{1}{273}\right)\right\}$$

0°C	15kΩ
10°C	9.6kΩ
20°C	6.3kΩ
25°C	5.4kΩ
30°C	4.3kΩ
40°C	3.0kΩ

8-1-2. Linear expansion valve

① **Operation summary of the linear expansion valve**

- Linear expansion valves open/close through the use of a stepping motor after receiving the pulse signal from the indoor controller board.
- Valve position can be changed in proportion to the number of pulse signals.

<Connection between the indoor controller board and the linear expansion valve>

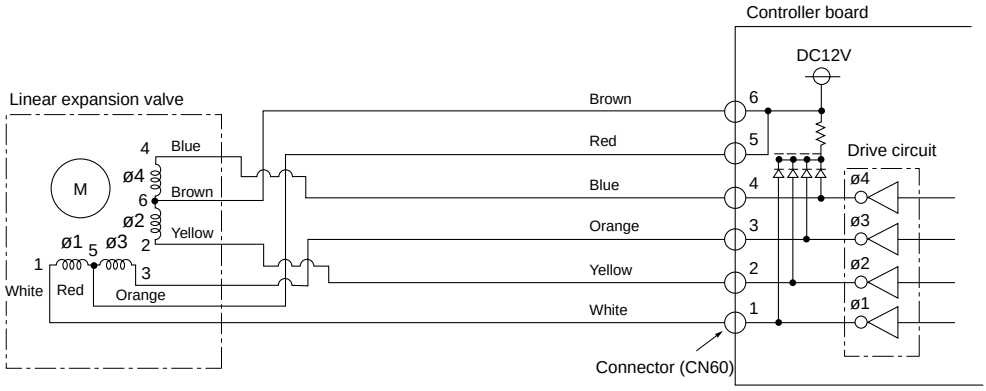

Note : Since the number of the connector at the controller board side and the relay connector are different, follow the color of the lead wire.

<Output pulse signal and the valve operation>

Output (Phase)	Output			
	1	2	3	4
ϕ1	ON	OFF	OFF	ON
ϕ2	ON	ON	OFF	OFF
ϕ3	OFF	ON	ON	OFF
ϕ4	OFF	OFF	ON	ON

Closing a valve : 1 → 2 → 3 → 4 → 1
Opening a valve : 4 → 3 → 2 → 1 → 4
The output pulse shifts in above order.

Note:
· When linear expansion valve operation stops, all output phase become OFF.
· At phase interruption or when phase does not shift in order, motor does not rotate smoothly and motor will lock and vibrate.

· When the switch is turned on, 2200 pulse closing valve signal will be sent till it goes to point Ⓐ in order to define the valve position.

When the valve moves smoothly, there is no sound or vibration occurring from the linear expansion valves, however, when the pulse number moves from Ⓔ to Ⓐ or when the valve is locked, more sound can be heard than in a normal situation.
· Sound can be detected by placing the ear against the screw driver handle while putting the screw driver tip to the linear expansion valve.

② Linear expansion valve operation

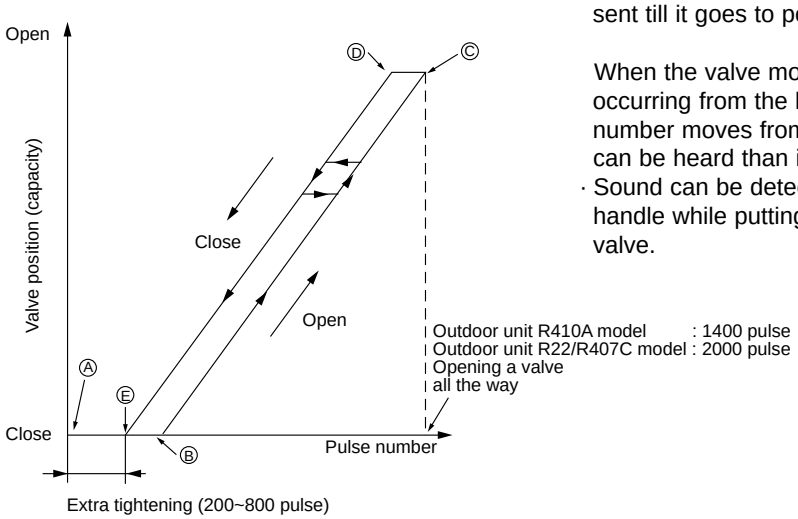

③ Troubleshooting

Symptom	Check points	Countermeasures
Operation circuit failure of the micro processor	Disconnect the connector on the controller board, then connect LED for checking. 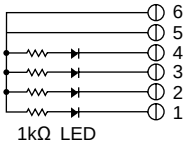 When power is turned on, pulse signals will output for 10 seconds. There must be some defects in the operation circuit if the LED does not light while the signals are output or keeps lighting even after the signals stop.	Exchange the indoor controller board at drive circuit failure.
Linear expansion valve mechanism is locked.	Motor will idle and make a ticking noise when the motor is operated while the linear expansion valve is locked. This ticking sound is the sign of the abnormality.	Exchange the linear expansion valve.
Short or breakage of the motor coil of the linear expansion valve	Measure the resistance between each coil (white-red, yellow-brown, orange-red, blue-brown) using a tester. It is normal if the resistance is in the range of 200Ω ±10%.	Exchange the linear expansion valve.
Valve does not close completely.	To check the linear expansion valve, operate the indoor unit in fan mode and at the same time operate other indoor units in cooling mode, then check the pipe temperature <liquid pipe temperature> of the indoor unit by the outdoor multi controller board operation monitor. During fan operation, linear expansion valve is closed completely and if there is any leaking, detecting temperature of the thermistor will go lower. If the detected temperature is much lower than the temperature indicated in the remote controller, it means the valve is not closed all the way. 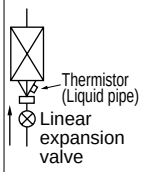 It is not necessary to exchange the linear expansion valve, if the leakage is small and not affecting normal operation.	If large amount of refrigerant is leaked, exchange the linear expansion valve.
Wrong connection of the connector or contact failure	Check the color of lead wire and missing terminal of the connector.	Disconnect the connector at the controller board, then check the continuity.

8-1-3. DC Fan motor (fan motor/indoor controller circuit board)

Check method of DC fan motor (fan motor/indoor controller circuit board)

① Notes

· High voltage is applied to the connecter (CNMF) for the fan motor. Pay attention to the service.

· Do not pull out the connector (CNMF) for the motor with the power supply on.

(It causes trouble of the indoor controller circuit board and fan motor.)

② Self check

Symptom : The indoor fan cannot turn around.

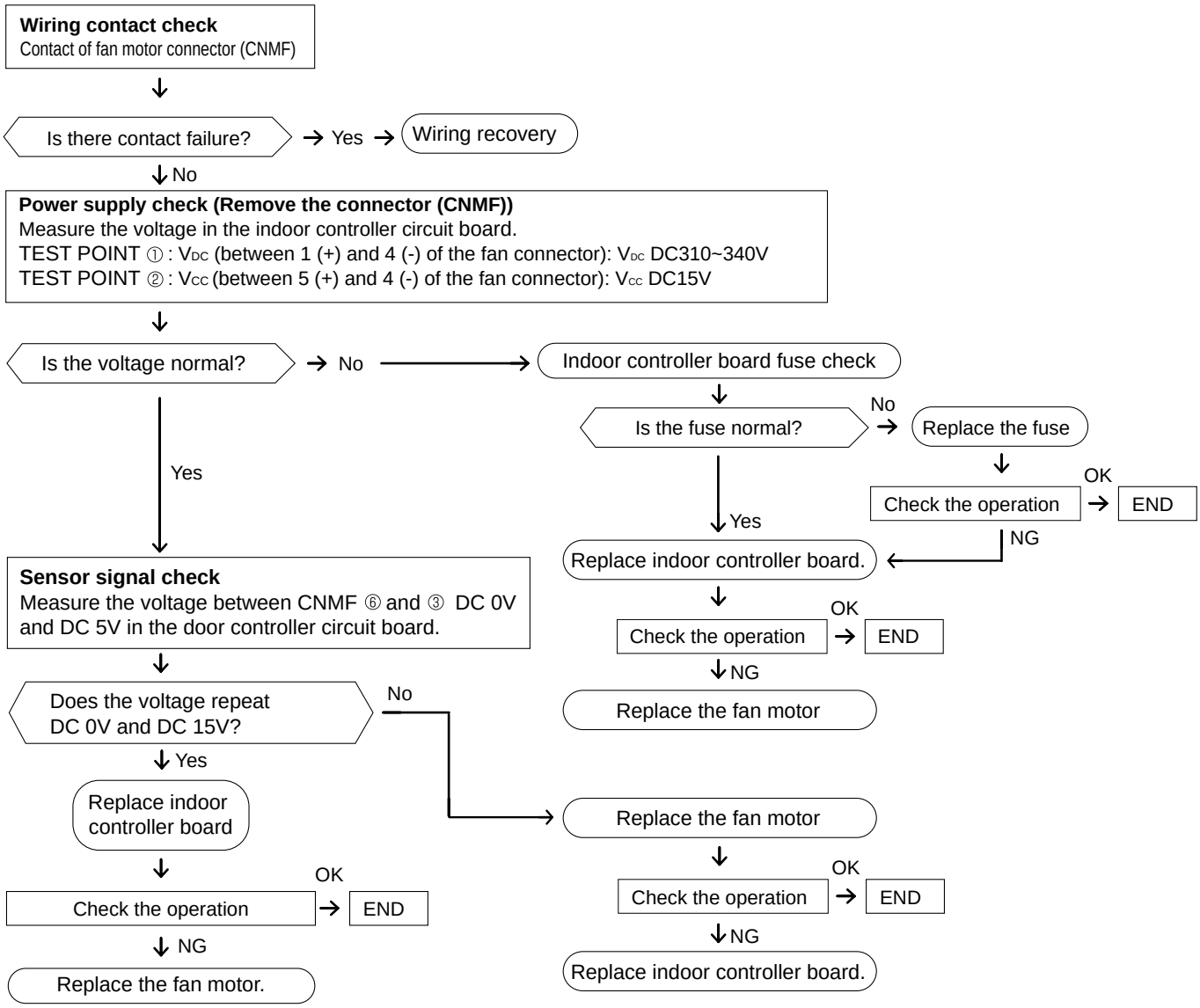

8-2. FUNCTION OF DIP SWITCH

The black square (■) indicates a switch position.

Switch	Pole	Function	Operation by switch		Effective timing	Remarks
			ON	OFF		
SW1 Function setting	1	Thermistor <Room temperature detection> position	Built-in remote controller	Indoor unit	Under suspension	Address board <Initial setting> ON ■ □ □ ■ □ □ □ □ □ □ OFF □ ■ ■ □ ■ ■ ■ ■ ■ ■ 1 2 3 4 5 6 7 8 9 10 Note : *1 Fan operation at heating mode *2 Thermo ON operation at heating mode *3
	2	Filter clogging detection	Provided	Not provided		
	3	Filter cleaning	2,500 hr	100 hr		
	4	Fresh air intake	Effective	Not effective		
	5	Switching remote display	Thermo ON signal display	Indicating fan operation ON/OFF		
	6	Humidifier control	Always operated while the heat in ON *1	Operated depends on the condition *2		
	7	Airflow set in case of Heat thermo OFF at heating mode	Low *3	Extra low *3		
	8		Setting air flow *3	Depends on SW1-7		
	9	Auto restart function	Effective	Not effective		
	10	Power ON/OFF by breaker	Effective	Not effective		

SW1-7	SW1-8	
OFF	OFF	Extra low
ON	OFF	Low
OFF	ON	Setting airflow
ON	ON	Stop

SW2 Capacity code setting	1~6				Before power supply ON	Indoor controller board Set while the unit is off. <Initial setting> Set for each capacity.
		Capacity	SW 2	Capacity	SW 2	
		P40	ON □ □ □ ■ □ □ OFF ■ ■ ■ □ ■ ■ 1 2 3 4 5 6	P63	ON ■ □ ■ ■ □ □ OFF □ ■ □ □ ■ ■ 1 2 3 4 5 6	
		P100	ON □ □ ■ □ □ ■ OFF ■ ■ □ ■ □ □ 1 2 3 4 5 6	P125	ON ■ □ □ ■ ■ □ OFF □ ■ ■ □ □ ■ 1 2 3 4 5 6	

SW3 Function setting	1	Heat pump/Cooling only	Cooling only	Heat pump	Under suspension	Indoor controller board Set while the unit is off. <Initial setting> ON □ □ ■ □ □ □ □ □ □ OFF ■ ■ □ □ ■ ■ ■ ■ □ ■ 1 2 3 4 5 6 7 8 9 10 Note : *4 SW3-5 *5 Please do not change SW3-9 and SW3-10. See 6. WIRING DIAGRAM. *6 Each angle can be used only 1 hour when fan speed setting Low and Middle 1,2
	2	Louver	Available	Not available		
	3	Vane	Available	Not available		
	4	Vane swing function in heating (wave-flow)	Available	Not available		
	5	Vane horizontal angle	Second setting *4	First setting *4		
	6	Vane cooling limit angle setting	Horizontal	Setting A,B,C,D		
	7	Changing the opening of linear expansion valve	Effective	Not effective		
	8	4-deg up (Heating mode)	Not effective	Effective		
	9	Superheat setting temperature *5	—	—		
	10	Sub cool setting temperature *5	—	—		

SW4 Model Selection	1~5	When replacing the indoor controller board, make sure to set the switch to the initial setting, which is shown below. ON □ □ □ □ □ OFF ■ ■ ■ ■ ■ 1 2 3 4 5	Before power supply ON	Indoor controller board

Note : *4 SW3-5

SW3-5	Vane setting	Initial setting	Setting	Vane position
OFF	Set up ①	●	Standard	Standard
ON	Set up ②		Less draft *	Upward position than the standard

The black square (■) indicates a switch position.

Switch	Pole	Operation by switch	Effective timing	Remarks
SWA Ceiling height selector	1~3	(High ceiling) 3 (Standard) 2 (Silent) 1 * Ceiling height can be changed depending on SWA setting. SWA: ① Silent, ② Standard, ③ High ceiling P40, P63: 2.5m, 2.7m, 3.5m P100, P125: 2.6m, 3.0m, 4.2m	Under operation or suspension	Address board <Initial setting> 3 2 1
SWC Option selector	2	② オプ (Option) ① 標 (Standard) * In this model it is not necessary to change SWC to ②.		Address board <Initial setting> ② オプ ① 標
SW11 1s digit address setting SW12 10ths digit address setting	Rotary switch	SW12 SW11 10 1 How to set address Example : If address is "3", remain SW12 (for over 10) at "0", and match SW11 (for 1 to 9) with "3".	Before power supply ON	Address board Address can be set while the unit is stopped. <Initial setting> SW12 SW11
SW14 Branch No. setting	Rotary switch	SW14 How to set branch number SW14 (Series R2 only) Match the indoor unit's refrigerant pipe with the BC contoller's end connection number Remain other than series R2 at "0".		Address board <Initial setting> SW14
J41, J42 Wireless remote controller Pair No.	Jumper	• To operate each indoor unit by each remote controller when installed 2 indoor units or more are near, Pair No. setting is necessary. ① Pair No. setting is available with the 4 patterns (Setting patters A to D). ② Make setting for J41, J42 of indoor controller board and the Pair No. of wireless remote controller. • You may not set it when operating it by 1 remote controller. ① Setting for indoor unit Jumper wire J41, J42 on the indoor controller board are cut according to the table below. ② Wireless remote controller pair number: Setting operation 1. Press the SET button (using a pointed implement). Check that the remote controller's display has stopped before continuing. MODEL SELECT flashes, and the model No. (3 digits) appears (steadily-lit). 2. Press the MINUTE button twice. The pair number appears flashing. 3. Press the temperature ▼ ▲ buttons to select the pair number to set. 4. Press the SET button (using a pointed implement). The set pair number is displayed (steadily-lit) for 3 seconds, then disappears. Setting pattern / Indoor controller Jumper wire J41 J42 / Pair No. of wireless remote controller * A — — 0 Factory setting B Cut — 1 — C — Cut 2 — D Cut Cut 3 — * Pair No.4-9 of wireless remote controller is setting pattern D.	Under operation or suspension	<Initial setting> Pattern A Pair No. Model No. Temperature button Minute button SET button
SWE Test run for Drain pump (Option)	Connector	Drain pump and fan are activated simultaneously after the connector SWE is set to ON and turn on the power. SWE OFF ON → SWE OFF ON The connector SWE is set to OFF after test run.	Under operation	<Initial setting> SWE OFF ON

8-3. TEST POINT DIAGRAM

8-3-1. Indoor controller board

PCFY-P40VKM-E **PCFY-P63VKM-E** **PCFY-P100VKM-E** **PCFY-P125VKM-E**

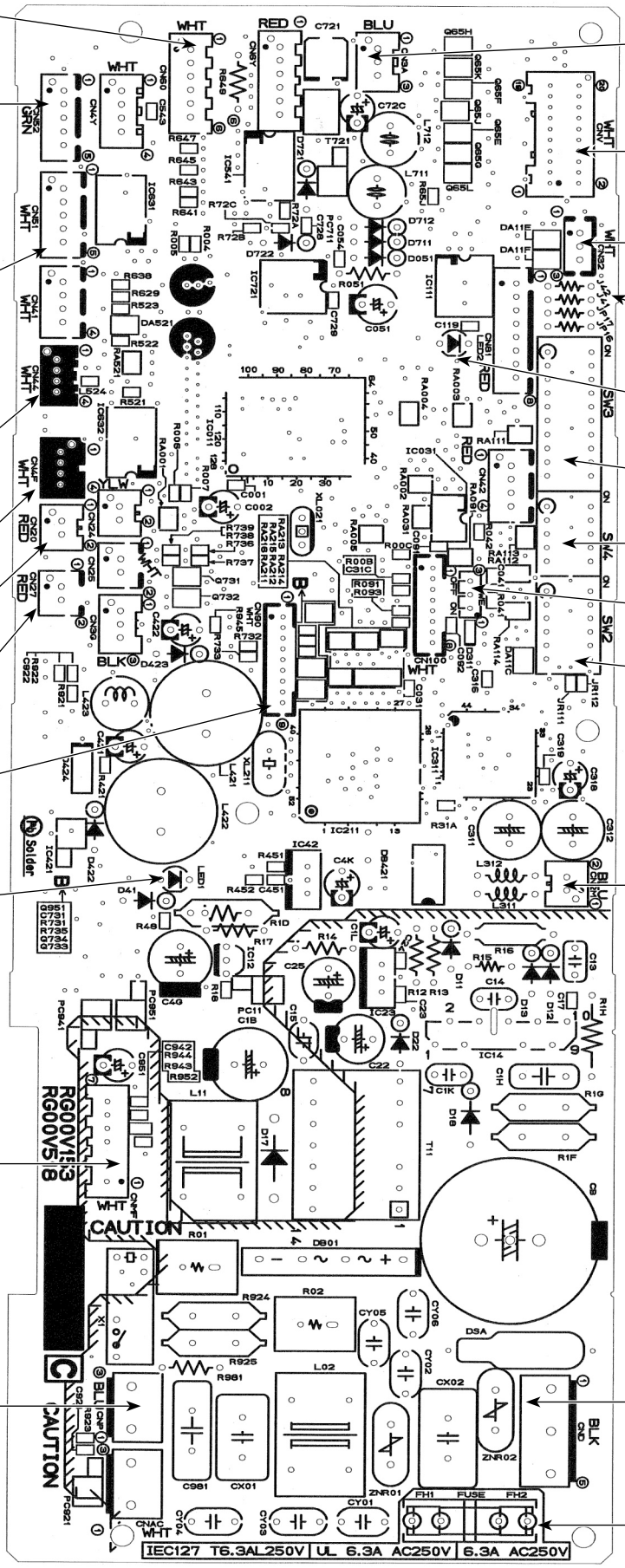

CN60
Linear expansion valve (LEV) output
12VDC pulse output

CN52
Remote indicator
①-②: Status lamp 12VDC (① : +)
Fan motor output (SW1-5 OFF)
Thermostat ON (SW1-5 OFF)
①-③: Cooling/Dry status lamp 12VDC (① : +)
①-④: Heating status lamp 12VDC (① : +)

CN51
Centrally control
①-② : Control signal 12VDC pulse input (① : +)
③-④ : Operation indicator 12VDC (③ : +)
③-⑤ : Malfunction indicator 12VDC (③ : +)

CN44
Pipe temperature thermistor
①-② : Liquid (TH22)
③-④ : Gas (TH23)

CN4F
Drain float switch (FS)

CN20
Room temperature thermistor (TH21)

CN27
Damper signal output
12VDC (① : +)

CN90
Connect to the wireless remote controller board (W.B)

LED1
Main power supply
(Indoor unit : 220-240V)

CNMF
Connect to the fan motor (MF)
①-④ : DC310~340V
⑤-④ : DC15V
⑥-④ : DC0~6V
⑦-④ : DC0 or DC15V

CNP
Drain pump output (DP)
①-③ : 220-240VAC

CN3A
Connect to the terminal block (TB15) (MA-Remote controller connecting wire)
① - ③ : 8.7-13V DC (Pin① (+))

CNV
Vane motor output
12VDC pulse

CN32
Remote switch

Jumper wire J41, J42
Pair No. setting for wireless remote controller

LED2
Power supply for MA-Remote controller

SW3
Function setting

SW4
Model selection

SWE
Test run (Drain pump)

SW2
Capacity setting

CN2M
Connect to the terminal block (TB5) (M-NET transmission connecting wire)
24-30VDC (non-polar)

CND
Power supply for indoor controller board
③ - ⑤ : 220-240VAC

FUSE
6.3A 250V

* The voltage range of DC12V in this page is between DC11.5 V to DC 13.7 V.

PCFY-P40VKM-ER1 **PCFY-P63VKM-ER1** **PCFY-P100VKM-ER1** **PCFY-P125VKM-ER1**

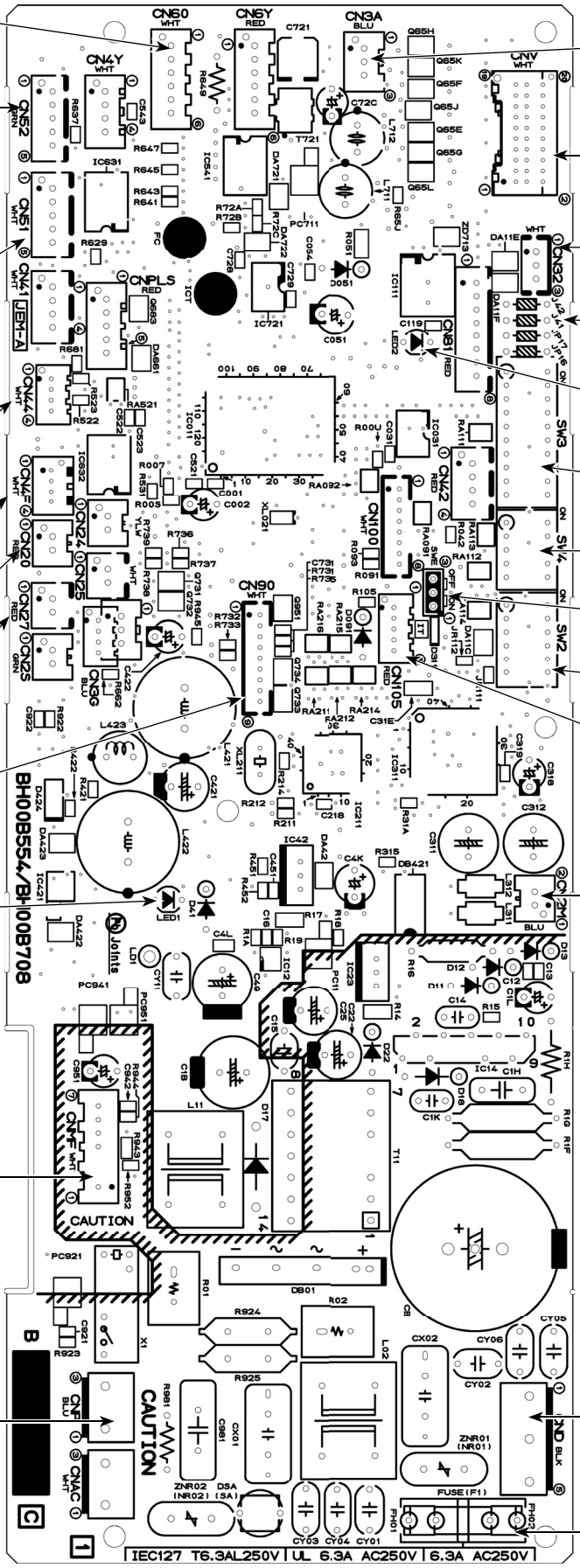

* The voltage range of DC12V in this page is between DC11.5 V to DC 13.7 V.

8-3-2. Address board

PCFY-P40VKM-E	**PCFY-P63VKM-E**	**PCFY-P100VKM-E**	**PCFY-P125VKM-E**
PCFY-P40VKM-ER1	**PCFY-P63VKM-ER1**	**PCFY-P100VKM-ER1**	**PCFY-P125VKM-ER1**

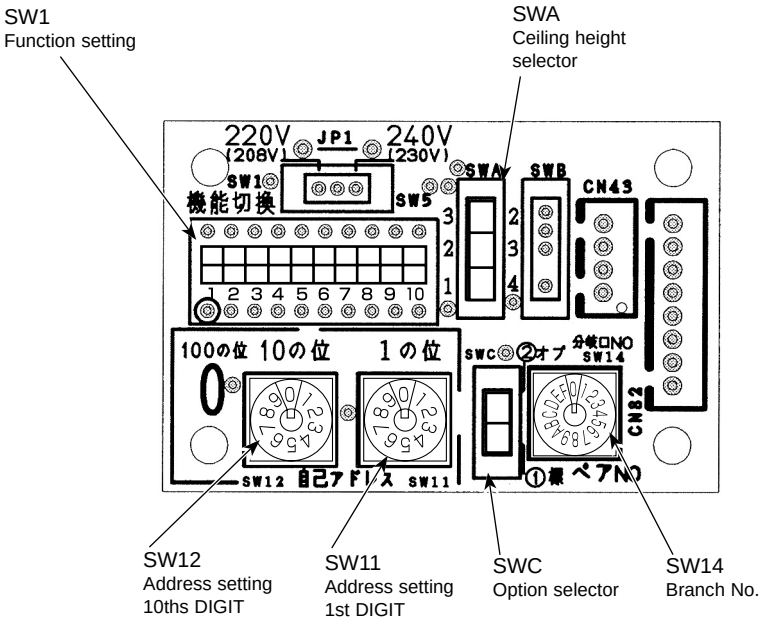

9 DISASSEMBLY PROCEDURE

PCFY-P40VKM-E **PCFY-P63VKM-E** **PCFY-P100VKM-E** **PCFY-P125VKM-E**
PCFY-P40VKM-ER1 **PCFY-P63VKM-ER1** **PCFY-P100VKM-ER1** **PCFY-P125VKM-ER1**

Be careful when removing heavy parts.

(Photo: **PCFY-P125VKM-E**)

OPERATING PROCEDURE

1. Removing the air intake grille

(1) Slide the air intake grille holding knobs (at 2 or 3 locations) to the rear to open the air intake grille. (See Figure 1)

(2) While the air intake grille left open, push the stoppers on the rear hinges (at 2 or 3 locations) to pull out the air intake grille. (See Figure 2)

Figure 2

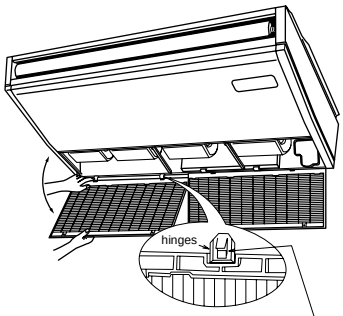

Pull out the air intake grille

PHOTOS & ILLUSTRATIONS

Figure 1

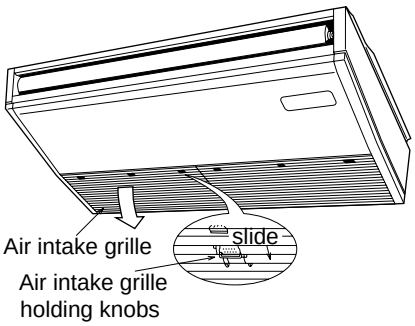

2. Removing the indoor controller board and the electrical box

(1) Remove the air intake grille. (See Figure 1,2)

(2) Remove the screw from the beam and remove the beam. (See Photo 1)

(3) Remove 2 screws from the electrical cover, and remove the electrical cover.

(4) Remove 2 screws from the electrical box and pull the electrical box downward.
Temporarily secure the electrical box using 2 hooks in the back of electrical box.

(5) Disconnect the connectors on the indoor controller board.

[Removing the electrical box]

(6) Disconnect the wires from the terminal blocks and pull out the electrical box. (See Photo 2)

[Removing the indoor controller board]

(6) Remove the 6 supports from the indoor controller board and remove the indoor controller board. (See Photo 3)

Photo 1

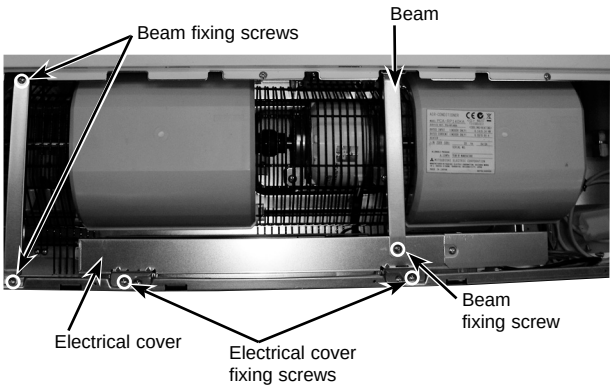

Photo 2

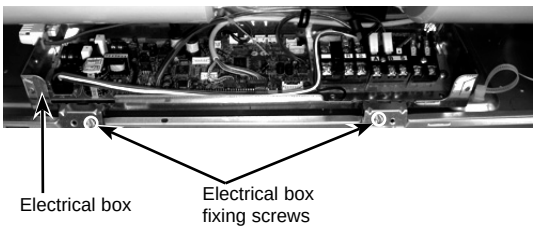

Photo 3

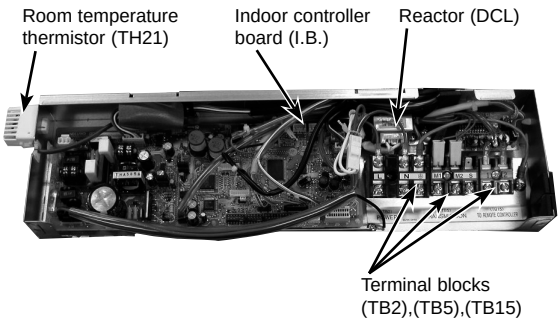

OPERATING PROCEDURE	PHOTOS & ILLUSTRATIONS
3. Removing the room temperature thermistor (TH21) (1) Remove the air intake grille. (See Figure 1, 2) (2) Remove the screw from the beam and remove the beam. (See Photo 1) (3) Remove 2 screws from the electrical cover, and remove the electrical cover. (4) Remove 2 screws from the electrical box and pull the electrical box downward. Temporarily secure the electrical box using 2 hooks in the back of electrical box. (5) Disconnect the connector CN20 (red) from the indoor controller board. (6) Remove the sensor holder from the electrical box and remove the thermistor form the holder.	**Photo 4** 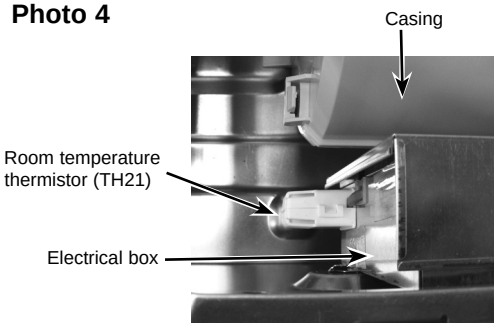
4. Removing the fan motor and right side fan (1) Remove the air intake grille. (See Figure 1, 2) (2) Remove the screw from the beam and remove the beam. (See Photo 1) (3) Remove 2 screws from the electrical cover, and remove the electrical cover. (4) Remove 2 screws from the electrical box and pull the electrical box downward. (5) Temporarily secure the electrical box using 2 hooks in the back of electrical box. (6) Remove 4 screws fixing fan guard of the fan motor. (2 screws : See Photo 5 / 2 screws : Upper the electrical box) (7) Remove 2 screws fixing fan guard of piping side and remove the fan guard. (See Photo 6) (8) Remove the lower casing while pressing the 4 catches of the casing (right side of the fan motor). (9) Loosen the 2 set screws (2 hexagon set screws) of connecting joint and slide the fan motor to the left. (See Photo 5) (10) Remove the motor piece (left and right, each 1 screw). (See Photo 5) (11) Remove the fan motor and right side fan together. (12) Loosen the set screw (hexagon set screw) of fan and remove the fan from the shaft. (See Photo 7, 8) **Photo 8** 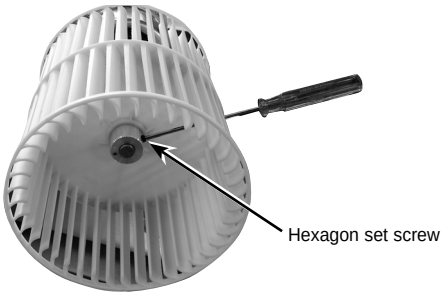 	**Photo 5** 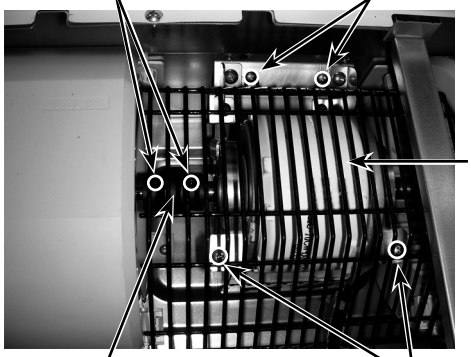 **Photo 6** 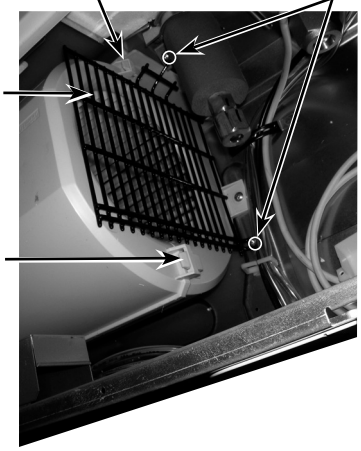 **Photo 7** 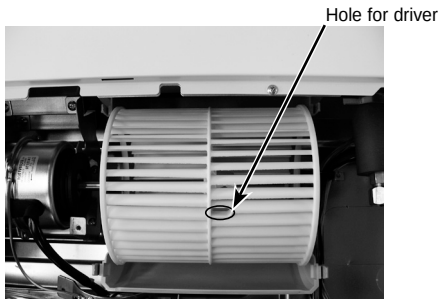

OPERATING PROCEDURE	PHOTOS & ILLUSTRATIONS

5. Removing the fan (3 connection)

(1) Remove the air intake grille. (See Figure 1, 2)
(2) Remove the screw from the beam and remove the beam. (See Photo 1)
(3) Remove 2 screws from the electrical cover, and remove the electrical cover.
(4) Remove 2 screws from the electrical box and pull the electrical box downward.
Temporarily secure the electrical box using 2 hooks in the back of electrical box.
(5) Remove 4 screws from the fan guard of the fan motor. (See Photo 5)
(6) Remove 2 screws from the left side beam and remove the beam. (See Photo 1)
(7) Remove the 3 screws from center fan guard and remove the fan guard. (2 screws : See Photo 9 / 1 screw : Drain pan side)
(8) Remove 2 screws from the left fan guard and remove the fan guard. (See Photo 10)
(9) Loosen 2 set screws (2 hexagon set screws) of connecting joint. (See Photo 5)
(10) Remove 3 lower casings while pressing each 4 catches of the casing.
(11) Remove the 4 screws from the bearing support. (See Photo 11)
(12) Slide the connecting joint to the left and remove the fans and shaft together. (See Photo 12)
(13) Remove the fan from the shaft. (See Photo 7, 8)

Photo 9

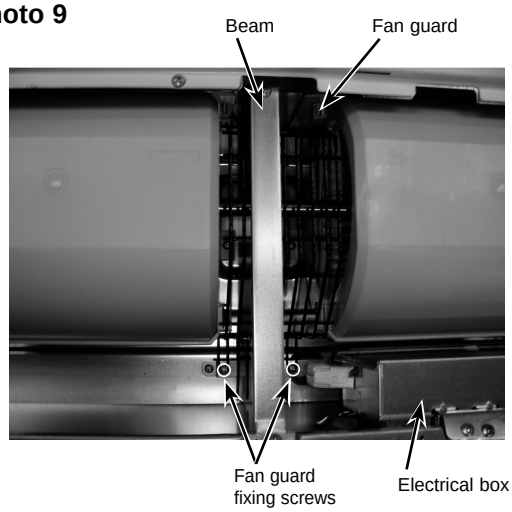

Photo 10

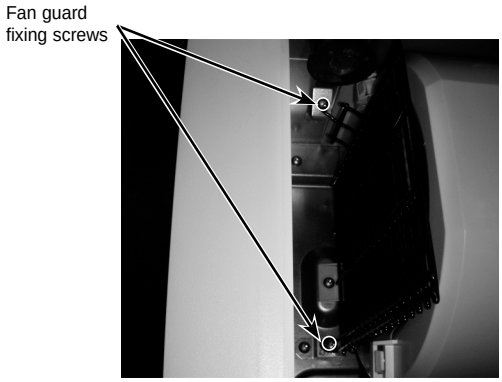

Photo 12

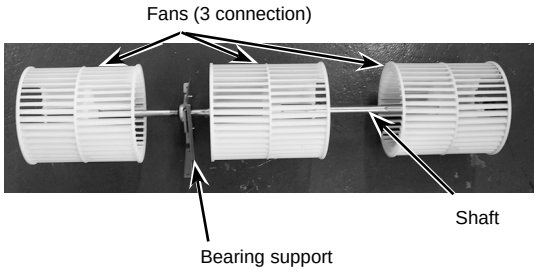

Photo 11

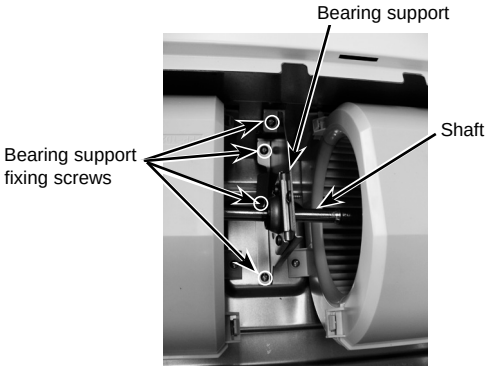

6. Removing the side panel

(1) Remove the air intake grille. (See Figure 1, 2)
(2) Remove the screw from the side panel, and remove the side panel by sliding the panel to the front.

Figure 3

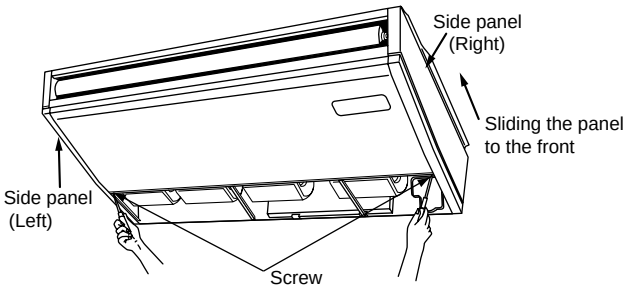

OPERATING PROCEDURE	PHOTOS & ILLUSTRATIONS
7. Removing the vane motor (1) Remove the air intake. (See Figure 1, 2) (2) Remove the right side panel. (See Figure 3) (3) Remove the connector of vane motor. (4) Remove 2 screws of vane motor cover , then remove vane motor.	**Photo 13** 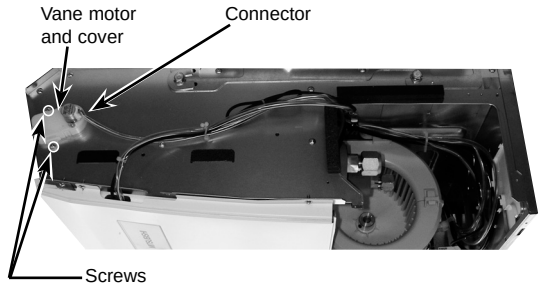
8. Removing the under panel (1) Remove the air intake grille. (See Figure 1, 2) (2) Remove the left and right side panels. (See Figure 3) (3) Remove the beam. (See Photo 1) (4) Remove the electrical cover. (See Photo 1) (5) Pull the electrical box downward. (See Photo 2) (6) (Wireless remote controller receiver type only) Disconnect the connector CNB from the PCB for wireless remote controller and remove the clamp and strap for wires. (7) Remove 8 screws from the under panel. (8) Move the under panel forward by about 10mm and remove the under panel.	**Photo 14** 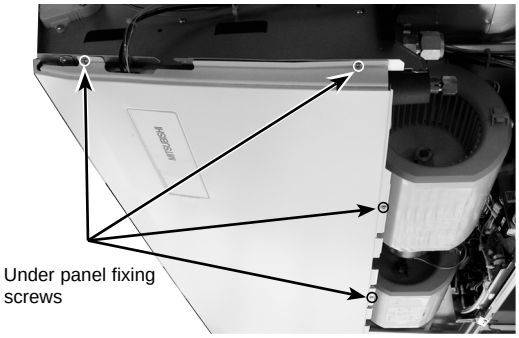
9. Removing the drain pan (1) Remove the air intake grille. (See Figure 1, 2) (2) Remove the side panel (right and left). (See Figure 3) (3) Remove the under panel. (See Photo 14) Remove the screws of the right and left side drain pan. (See Photo 15) (4) Remove 2 insulation in center of the drain pan, and after removing 2 screws with washer, remove the drain pan. (See Photo 16, 17) (Note) Please be aware that there might be some drainage left in the drain pan when you remove the drain pan. **Photo 17** 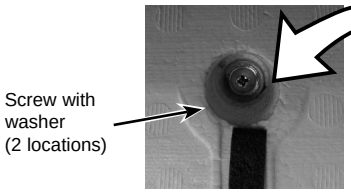 	**Photo 15** 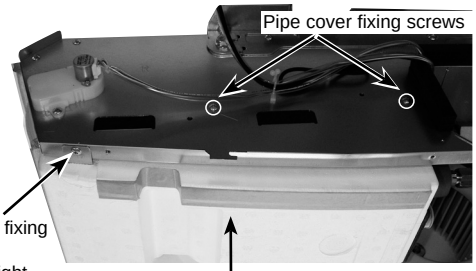 **Photo 16** 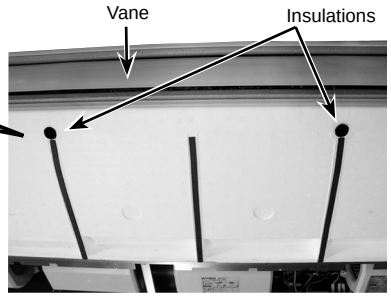

OPERATING PROCEDURE	PHOTOS & ILLUSTRATIONS
10. Removing the pipe thermistors / Liquid (TH22) and Gas (TH23) (1) Remove the air intake grille. (See Figure 1, 2) (2) Remove the left and right side panels. (See Figure 3) (3) Remove the under panel. (See Photo 14) (4) Remove the drain pan. (See Photo 15, 16, 17) (5) Disconnect the connector CN44 (white) from the indoor controller board. (6) Remove 6 screws from the pipe cover and remove the pipe cover. (See Photo 15, 18) (7) Remove the fastener for wires and remove the thermistors (liquid and gas) from each holder. (See Photo 19)	**Photo 18** 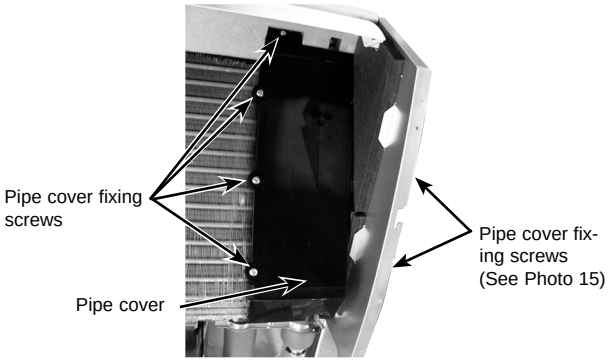 **Photo 19** 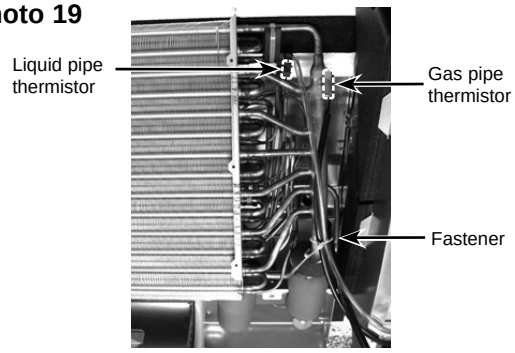
11. Removing the guide vane (1) Remove the intake grille. (See Figure 1, 2) (2) Remove the side panel (right and left). (See Figure 3) (3) Remove the under panel. (See Photo 14) (4) Remove the drain pan. (See Photo 15, 16, 17) (5) Remove the screw from the guide vane, then remove the guide vane.	**Photo 20** 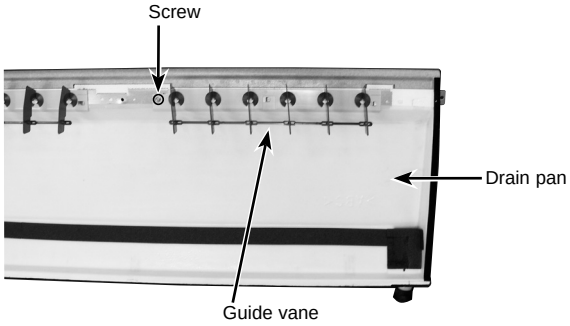
12. Removing the Auto vane (1) Remove the intake grille. (See Figure 1, 2) (2) Remove the right side panel. (See Figure 3) (3) Remove the vane motor and cover. (See Photo 13) (4) Slide the auto vane to the vane motor side. (5) Remove 2 axes from each vane support pushing the vane support to the vane sleeve side.	**Photo 21** 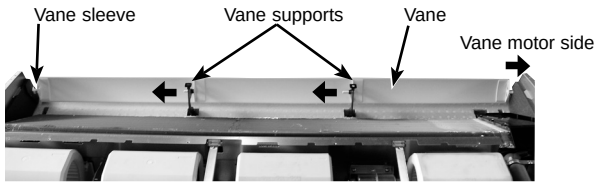

OPERATING PROCEDURE	PHOTOS & ILLUSTRATIONS
13. Removing the heat exchanger and LEV (1) Remove the air intake grille. (See Figure 1, 2) (2) Remove the beam. (See Photo 1) (3) Remove the electrical cover. (See Photo 1) (4) Pull the electrical box downward. (See Photo 2) (5) Disconnect the connector CN60 (white) from the indoor controller board. (6) Remove the left and right side panels. (See Figure 3) (7) Remove the under panel. (See Photo 14) (8) Remove the drain pan. (See Photo 15, 16, 17) (9) Remove the pipe cover. (See Photo 18) (10) Remove the pipe thermistors (TH22 and TH23) from each holder. (See Photo 19) (11) Remove the pipe band fixing screw and remove the pipe band. (See Photo 22) (12) Remove 2 screws from the heat exchanger and remove the heat exchanger with LEV.	**Photo 22** 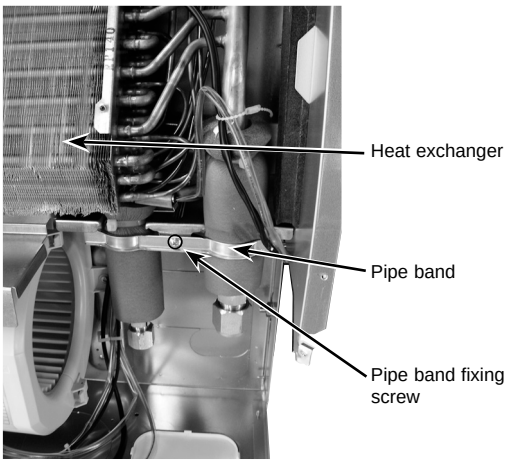 **Photo 23** 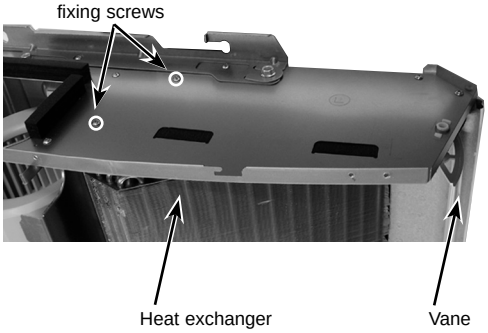

CITY MULTI™

MITSUBISHI ELECTRIC CORPORATION

HEAD OFFICE : TOKYO BLDG., 2-7-3, MARUNOUCHI, CHIYODA-KU TOKYO 100-8310, JAPAN

Distributed in Dec. 2012 No. OCH449 REVISED EDITION-A
Distributed in Dec. 2008 No. OCH449 PDF 7
Made in Japan

New publication, effective Dec. 2012
Specifications are subject to change without notice.